# ADJOURNED MEETING OF THE COUNTY BOARD OF COMMISSIONERS

**What:** Aitkin County Board Agenda

**When:** February 13, 2024

**Where:** Government Center Board Room
(Commissioners Kearney and Sample will be attending the meeting remotely from the NACo Legislative Conference at 1900 Connecticut Ave NW, Washington, DC 20009)

The public is invited to join the meeting remotely by phone call:

Phone: **1-415-655-0001** Access Code: **2551 865 6321** Meeting Password: **7282**

**9:00 a.m.**

**1) J. Mark Wedel, County Board Chair**

**A) Call to Order**
**B) Pledge of Allegiance**
**C) Approval of the Agenda**

**9:00 a.m.**

**D) Citizens Public Comment-** Comments from visitors must be informational and not exceed (5) minutes per person (when there is a large number of speakers to be heard, the Board of Commissioners may shorten this time). The County Board generally will not engage in a discussion or debate in those give minutes but will take the information and finds answers if that is appropriate. As part of the County Board protocol, it is unacceptable for any speaker to slander or engage in character assassination at a public board meeting. Anyone attending virtually wishing to speak during the public comment period should notify the County Administrators office at 218-927-727 option 7 no later than 2:30 P.M. on the Monday before the meeting.

**2) Consent Agenda-** All items on the Consent Agenda are considered to be routine and have been made available to the County Board at least two days prior to the meeting; the times will be enacted by one motion. There will be no separate discussion of these items unless a Board member or citizen so requests, in which event the item will be removed from this Agenda and considered under separate motion.

**A) Correspondence File-**
January 23, 2024 - February 12, 2024
**B) Approve County Board Minutes-**
January 23, 2024
**C) Approve Electronic Funds Transfers**
EFT through February 5, 2024
**D) Approve Manual Warrants/Voids/Corrections-**
ELAN 01-04-2024
**E) Approve Auditor Vouchers-**
December 2023 Settlements
**F) Approve-**
Consumption & Display Permits - Larson's Barn LLC
**G) Approve-**
Consumption & Display Permits - Hidden Meadows Campground
**H) Approve-**
Consumption & Display Permits - Minnewawa Sportsmen's Club
**I) Adopt Resolution-**
LG220 Application for Exempt Permit - Lawler Area Community Club
**J) Adopt Resolution-**
Search & Rescue Donation - BNSF Railway Foundation
**K) Approve Manual Warrants/Voids/Corrections-**
Manual Warrants 01-25-2024
**L) Adopt Resolution-**
Application for Temp On Sale Liquor License - Wealthwood Rod & Gun Club
**M) Adopt Resolution-**
Final Contract Payment (#20222)
**N) Adopt Resolution-**
Final Contract Payment (#20227)
**O) Adopt Resolution-**
Grant Agreement No. 1054971 (SAP 001-599-043)
**P) Adopt Resolution-**
Grant Agreement No. 1055207 (SAP 001-599-041)
**Q) Adopt Resolution-**
Grant Agreement No. 1055737 (SAP 001-605-016)
**R) Approve Manual Warrants/Voids/Corrections-**
ELAN 01-18-2024
**S) Approve-**
Affidavit for Duplicate of Lost Warrant - Lamke
**T) Approve Manual Warrants/Voids/Corrections-**
Manual Warrants 01-31-2024
**U) Adopt Resolution-**
2023 Annual Apportionment Percentages of Forfeited Tax Sales
**V) Approve-**
Revised Raiche Easement
**W) Approve-**
Consumption & Display Permit - Melaas, LuRae
**X) Approve-**
Revitalization Grant: Award Funding
**Y) Approve Auditor Vouchers-**
R&B 02-02-2024
**Z) Approve-**
Fire Protection Contract
**AA) Adopt Resolution-**
2023 Annual Apportionment of Forfeited Tax Sales
**AB) Approve-**
Equipment Purchase - Pickup Truck
**AC) Approve-**
Equipment Purchase - Pickup Truck with Survey Box Insert
**AD) Approve-**
Affidavit for Duplicate of Lost Warrant - Snyder
**AE) Approve-**
Affidavit for Duplicate of Lost Warrant - Mindrum
**AF) Adopt Resolution-**
County On, Off and Sunday Liquor License - Prairie River Retreat
**AG) Adopt Resolution-**
LG 220 Application for Exempt Gambling - Ducks Unlimited Aitkin Area -3/2024
**AH) Approve-**
LG 220 Application for Exempt Gambling - Ducks Unlimited Aitkin Area -4/2024
**AI) Approve-**
Out of State Travel for Training
**AJ) Approve County Board Minutes-**
COW 01-30-2024

**9:05 a.m.**

3) John Welle – County Engineer
   - A) Adopt Resolution - Award Contract 20244
   - B) Adopt Resolution - Federal Participation in Advance Construction Agreement No. 1055543
   - C) Adopt Resolution - Detour Agreement No. 1055754
   - D) Adopt Resolution - Great River Energy Easement No. ML-PP-420

**9:25 a.m.**

4) Mark Jeffers – Economic Development Coordinator
   - A) Approve Revitalization Grant: Award funding
   - B) Approve Business Development & Recreation Grant: Award funding

**9:35 a.m.**

5) Dennis Thompson – Land Commissioner
   - A) Land Department 2023 Budget Review - Discussion Only
   - B) Approve Revised LLCC Manager Job Description
   - C) Approve LLCC Residential House Lease

**9:55 a.m.**

6) Dave McMillan – LLCC Manager
   - A) Long Lake Conservation Center 2023 Budget Review

**10:05 a.m.**

7) Andrew Carlstrom – Environmental Services Director
   - A) Red Door East Fish House Park Final Board Approval
   - B) Approve Residential Waste Electronics Collection

**10:15 a.m.**

8) Dan Guida – County Sheriff
   - A) Adopt Resolution - ICAC JPA
   - B) Jail Medical

**10:45 a.m.**

9) Kami Genz – Community Corrections Director
   - A) Approve 2024 Comprehensive Plan

**10:50 a.m.**

10) Jessica Seibert – County Administrator
   - A) Approve Letter to Governor Walz
   - B) Consider Aitkin County CARE Appropriation Resolution
   - C) Administrator Updates

**11:10 a.m.**

11) Board of Commissioners
   - A) Commissioners Committee Reports

**ADJOURN**

AITKIN COUNTY
ES- 1857

**2B**

# AITKIN COUNTY BOARD OF COMMISSIONERS

| January 23, 2024 | 9:00 a.m. | Government Center Board Room |
|---|---|---|

Regular Session Minutes

1.A **CALL TO ORDER**

Chair Wedel called the meeting to order at 9:01 a.m.

| Attendee Name | Title | Status |
|---|---|---|
| J. Mark Wedel | District #1 | Present |
| Laurie Westerlund | District #2 | Present |
| Travis Leiviska | District #3 | Present |
| Bret Sample | District #4 | Present |
| Michael Kearney | District #5 | Present |
| Jessica Seibert | County Administrator | Present |
| April Kellerman | Administrative Assistant | Present |

1.B **PLEDGE OF ALLEGIANCE**

1.C **APPROVAL OF AGENDA**

Motion to: Approve the agenda, as amended.

| | |
|---|---|
| **RESULT:** | **APPROVED (5 TO 0)** |
| **MOVER:** | Commissioner Bret Sample |
| **SECONDER:** | Commissioner Michael Kearney |
| | Removed item 2Q, changes to item 5C, and added item 9A |

1.D **Health & Human Services (see separate HHS Agenda)**

1.E **Citizens Public Comment - None**

2 **CONSENT AGENDA**

Motion to: Approve the Consent Agenda.

| | |
|---|---|
| **RESULT:** | **APPROVED (5 TO 0)** |
| **MOVER:** | Commissioner Laurie Westerlund |
| **SECONDER:** | Commissioner Travis Leiviska |

**A) Correspondence File-**

January 2, 2024 - January 22, 2024

**B) Approve County Board Minutes-**

January 2, 2024

**C) Approve Electronic Funds Transfers**

| | |
|---|---|
| **Total** | $1,835,408.44 |

**D) Approve Manual Warrants/Voids/Corrections-**

Manual Warrants 12-29-2023

| | | | | | | | |
|---|---|---|---|---|---|---|---|
| General | $1,627.20 | | | | | **Total** | $1,627.20 |

**E) Approve Commissioner's Vouchers**

Commissioner Warrants 12-29-2023

| | | | | | | | |
|---|---|---|---|---|---|---|---|
| HHS | $951.06 | | | | | **Total** | $951.06 |

**F) Approve Auditor Vouchers-**

Auditor Warrants 12-29-2023

| | | | | | | | |
|---|---|---|---|---|---|---|---|
| General | $209,378.27 | Reserves | $2,059.89 | Forest | $357.39 | Taxes | $889.27 |
| Parks | $6,712.39 | COVID | $42,317.00 | | | **Total** | $261,714.21 |

**G) Approve Commissioner's Vouchers**

Commissioner Warrants 01-05-2024

| | | | | | | | |
|---|---|---|---|---|---|---|---|
| General | $14,663.74 | Reserves | $6,500.00 | R&B | $64,334.54 | Trust | $1,201.20 |
| Forest | $439.26 | LLCC | $13,101.47 | | | **Total** | $100,240.21 |

**H) Approve Manual Warrants/Voids/Corrections-**

ELAN 12-21-2023

| | | | | | | | |
|---|---|---|---|---|---|---|---|
| General | $11,516.00 | Trust | $396.61 | Forest | $125.18 | LLCC | $686.92 |
| | | | | | | **Total** | $12,724.71 |

**I) Approve Auditor Vouchers-**

Sales/Use Tax and Diesel Tax: December 2023

| | | | | | | | |
|---|---|---|---|---|---|---|---|
| General | $121.88 | R&B | $1,007.80 | Trust | $121.68 | LLCC | $33.46 |
| | | | | | | **Total** | $1,284.82 |

**J) Adopt Resolution-**

Set Public Hearing Date for Land Classification April 9, 2024

**K) Approve Manual Warrants/Voids/Corrections-**

Manual Warrants 01-12-2024

| | | | | | | | |
|---|---|---|---|---|---|---|---|
| General | $3,358.02 | State | $70,721.67 | | | **Total** | $74,079.69 |

**L) Approve Commissioner's Vouchers**

Commissioner Warrants 01-19-2024

| | | | | | | | |
|---|---|---|---|---|---|---|---|
| General | $1,843,103.90 | Reserves | $7,248.12 | R&B | $223,621.33 | HHS | $61,826.54 |
| Debt | $565,507.51 | State | $270.00 | Trust | $41,137.33 | Forest | $19,624.76 |
| Taxes | $120.00 | LLCC | $23,713.00 | Parks | $134,486.92 | COVID | $1,000.00 |
| | | | | | | **Total** | $2,921,659.41 |

**M) Adopt Resolution-**

LG 200 Application Exempt Permit - Friends of Don Sather, Inc

**N) Approve-**

Appointment for District 2 Board of Adjustment

**O) Approve-**

Appointment for District 2 Planning Commission

**P) Approve-**

Appointment for District 3 Planning Commission

~~**Q) Approve-**~~

~~Affidavit for Duplicate of Lost Warrant~~

## Regular Agenda

3A Mike Dangers – County Assessor

**Motion to:**

Schedule County Board of Appeal and Equalization

| | |
|---|---|
| **RESULT:** | **APPROVED (5 TO 0)** |
| **MOVER:** | Commissioner Bret Sample |
| **SECONDER:** | Commissioner Travis Leiviska |

4A Bobbie Danielson – Human Resources Director

**Motion to:**

Approve Job Re-evaluations

| | |
|---|---|
| **RESULT:** | **APPROVED (5 TO 0)** |
| **MOVER:** | Commissioner Laurie Westerlund |
| **SECONDER:** | Commissioner Bret Sample |

Bobbie Danielson – Human Resources Director

4B **Motion to:**

Approve Non-union Salary Adjustments

| | |
|---|---|
| **RESULT:** | **APPROVED (5 TO 0)** |
| **MOVER:** | Commissioner Michael Kearney |
| **SECONDER:** | Commissioner Travis Leiviska |

Bobbie Danielson – Human Resources Director

4C **Motion to:**

Approve Personnel Committee Recommendations

| | |
|---|---|
| **RESULT:** | **APPROVED (5 TO 0)** |
| **MOVER:** | Commissioner Bret Sample |
| **SECONDER:** | Commissioner Michael Kearney |

5A Andrew Carlstrom – Environmental Services Director

**Motion to:**

Wealthwood RV Resort Expansion Final Board Approval

| | |
|---|---|
| **RESULT:** | **APPROVED (5 TO 0)** |
| **MOVER:** | Commissioner Laurie Westerlund |
| **SECONDER:** | Commissioner Michael Kearney |

5B Andrew Carlstrom – Environmental Services Director

**Motion to:**

Deer Lake Farmstead Campground Final Board Approval

| | |
|---|---|
| **RESULT:** | **APPROVED (5 TO 0)** |
| **MOVER:** | Commissioner Laurie Westerlund |
| **SECONDER:** | Commissioner Michael Kearney |

5C Andrew Carlstrom – Environmental Services Director

**Motion to:**

Adopt Second Reading - Amendment to Vacation Short-Term Rental Ordinance

| | |
|---|---|
| **RESULT:** | **APPROVED (5 TO 0)** |
| **MOVER:** | Commissioner Travis Leiviska |
| **SECONDER:** | Commissioner Bret Sample |
| | Request for Public Comment - none received |

6A Mark Jeffers – Economic Development Coordinator

**Motion to:**

Approve Revitalization Grant: Award Funding

| | |
|---|---|
| **RESULT:** | **APPROVED (5 TO 0)** |
| **MOVER:** | Commissioner Michael Kearney |
| **SECONDER:** | Commissioner Bret Sample |

7A Jessica Seibert – County Administrator

**Motion to:**

Approve Committee of the Whole Meeting

| | |
|---|---|
| **RESULT:** | **APPROVED (5 TO 0)** |
| **MOVER:** | Commissioner Laurie Westerlund |
| **SECONDER:** | Commissioner Bret Sample |

7B Jessica Seibert – County Administrator

**Motion to:**

Adopt Resolution - Elected Official Salary Adjustments, as amended

| | |
|---|---|
| **RESULT:** | **APPROVED (5 TO 0)** |
| **MOVER:** | Commissioner Laurie Westerlund |
| **SECONDER:** | Commissioner Travis Leiviska |
| | Friendly Amendment approved changing County Recorder salary amount |

7C Jessica Seibert – County Administrator

**Informational Only**

Administrator Updates

Regional MACA call, Department Heads meeting, Personnel Committee, Emergency Preparedness meeting, Center for Rural Development meeting, Facilities Committee

8A Board of Commissioners

**Informational Only**

Committee Reports

Planning Commission, Facilities Committee, Joint Powers Natural Resources Board, Aquatic Invasive Species, East Central Regional Library Board, Snake River 1W1P, Arrowhead Regional Development Commission, MN Rural Counties, Northern Counties Coalition, Arrowhead Counties Association, Aitkin County Community Corrections, Aitkin County Water Planning Task Force, Toward Zero Deaths, North Memorial EMS meeting

**Motion to Close Meeting Under MN Statute 13D.03 Subd.1(b) Labor Negotiations**

Motion made at 11: 47 a.m.

| | |
|---|---|
| **RESULT:** | **APPROVED (5 TO 0)** |
| **MOVER:** | Commissioner Travis Leiviska |
| **SECONDER:** | Commissioner Laurie Westerlund |

**Motion to Reopen Meeting**

Motion made at 12:12 p.m.

| | |
|---|---|
| **RESULT:** | **APPROVED (5 TO 0)** |
| **MOVER:** | Commissioner Laurie Westerlund |
| **SECONDER:** | Commissioner Travis Leiviska |

**Motion to Adjourn**

Motion made at 12:12 p.m.

| | |
|---|---|
| **RESULT:** | **APPROVED (5 TO 0)** |
| **MOVER:** | Commissioner Bret Sample |
| **SECONDER:** | Commissioner Michael Kearney |
| **Next Meeting:** | Tuesday, February 13, 2024 |

J. Mark Wedel, Board Chair
Aitkin County Board of Commissioner

Jessica Seibert
County Administrator

# Board of County Commissioners Agenda Request

**2C**
Agenda Item #

**Requested Meeting Date:** 2/13/2024

**Title of Item:** EFT Report

| | |
|---|---|
| ☐ REGULAR AGENDA<br>☑ CONSENT AGENDA<br>☐ INFORMATION ONLY | **Action Requested:**<br>☐ Approve/Deny Motion<br>☐ Adopt Resolution (attach draft)<br>☐ Direction Requested<br>☐ Discussion Item<br>☐ Hold Public Hearing*<br>**provide copy of hearing notice that was published* |
| **Submitted by:**<br>Lori Grams | **Department:**<br>County Treasurer |
| **Presenter (Name and Title):**<br>N/A | **Estimated Time Needed:** |

**Summary of Issue:**

EFT Report thru 2/5/2024

**Alternatives, Options, Effects on Others/Comments:**

**Recommended Action/Motion:**

**Financial Impact:**
*Is there a cost associated with this request?* ☐ *Yes* ☐ *No*
*What is the total cost, with tax and shipping? $*
*Is this budgeted?* ☐ *Yes* ☐ *No* *Please Explain:*

Legally binding agreements must have County Attorney approval prior to submission.

## ELECTRONIC FUNDS TRANSFER

## Thru February 5, 2024 Board Meeting February 13, 2024

| Abstract Number | Date | Amount | Reason |
|---|---|---|---|
| 21934 | 1/19/24 | $2,211,310.28 | Commissioner Abstract |
| 21936 | 1/19/24 | $761.99 | Auditor Abstract |
| 21939 | 1/23/24 | $696,608.81 | Auditor Abstract |
| 21940 | 1/18/24 | $10,395.17 | Manual Abstract |
| 21941 | 1/23/24 | $7,136.54 | Commissioner Abstract |
| 21942 | 1/25/24 | $100,705.77 | Manual Abstract |
| 21943 | 1/26/24 | $718,268.85 | Payroll Abstract |
| 21944 | 1/26/24 | $9,324.33 | Auditor Abstract |
| 21945 | 2/2/24 | $178,296.13 | Commissioner Abstract |
| 21946 | 1/31/24 | $39.31 | Manual Abstract |
| 21947 | 2/2/24 | $4,565.43 | Auditor Abstract |

$0

Voids/No ACH

21935

21937

21938

21948

21949

$3,937,412.61

S:Board Report:2023 EFT Board Report Thru Date

| Vendor No. | Name / Account/Formula | Rpt Accr | Amount | Warrant Description / Service Dates | Invoice # / Paid On Bhf # | Account/Formula Description / On Behalf of Name | 1099 |
|---|---|---|---|---|---|---|---|
| **5462** | **Bremer Bank (Elan ACH)** | | | | | | |
| 2 | 05-400-440-0410-6405 | AP | 7.40 | AGENCY-HI-LITERS/9X12 ENV<br>12/27/2023 12/27/2023 | | Office Supplies | N |
| 3 | 05-420-600-4800-6405 | AP | 17.45 | AGENCY-HI-LITERS/9X12 ENV<br>12/27/2023 12/27/2023 | | Office Supplies | N |
| 4 | 05-430-700-4800-6405 | AP | 28.04 | AGENCY-HI-LITERS/9X12 ENV<br>12/27/2023 12/27/2023 | | Office Supplies | N |
| 5 | 05-430-700-4800-6805 | AP | 20.67 | MH INIT-TRANS/BUS TICKET<br>12/15/2023 12/15/2023 | 156888006 | Mh Init - Transportation (416) | N |
| 1 | 05-430-700-4800-6805 | AP | 91.21 | MH INIT - TRANS/BUS TICKET<br>12/21/2023 12/21/2023 | 156892013 | Mh Init - Transportation (416) | N |
| **5462** | **Bremer Bank (Elan ACH)** | | **164.77** | **5** Transactions | | | |
| **5 Fund Total:** | | | **164.77** | **Health & Human Services** | **1 Vendors** | **5 Transactions** | |
| **Final Total:** | | | **164.77** | **1 Vendors** | **5 Transactions** | | |

Copyright 2010-2022 Integrated Financial Systems

| Vendor No. | Name / Account/Formula | Rpt Accr | Amount | Warrant Description / Service Dates | Invoice # / Paid On Bhf # | Account/Formula Description / On Behalf of Name | 1099 |
|---|---|---|---|---|---|---|---|
| **5462** | **Bremer Bank (Elan ACH)** | | | | | | |
| 12 | 01-001-000-0000-6241 | AP | 575.00 | SAMPLE NACO REG. FEE | 0153 | Registration Fee | N |
| 16 | 01-252-000-0000-6465 | AP | 35.79 | CHRISTMAS TREATS | 01910 | Inmate Supplies | N |
| 18 | 01-200-003-0000-6335 | AP | 20.01 | LANA TRAINING GAS | 025524 | Gas/Vehicle Fuel Charges | N |
| 29 | 01-200-200-0000-6268 | AP | 2.00 | $2 TIP AT SILOS | 077011 | Training, Development | N |
| 20 | 01-200-003-0000-6241 | AP | 649.00 | #222 FTO CERTIFICATION | 1000 | Registration Fee | N |
| 8 | 01-043-000-0000-6268 | AP | 19.99 | GALLUP WEB TRAINING | 1052348184839 | Staff Training, Development | N |
| 9 | 01-043-000-0000-6268 | AP | 19.99 | GALLUP WEB TRAINING | 1052351884839 | Staff Training, Development | N |
| 11 | 01-043-000-0000-6268 | AP | 19.99 | GALLUP WEB TRAINING | 1052353864839 | Staff Training, Development | N |
| 6 | 01-043-000-0000-6268 | AP | 19.99 | GALLUP WEB TRAINING | 1052354444839 | Staff Training, Development | N |
| 5 | 01-043-000-0000-6268 | AP | 19.99 | GALLUP WEB TRAINING | 1052374104839 | Staff Training, Development | N |
| 7 | 01-043-000-0000-6268 | AP | 19.99 | GALLUP WEB TRAINING | 1052376694839 | Staff Training, Development | N |
| 10 | 01-043-000-0000-6268 | AP | 19.99 | GALLUP WEB TRAINING | 1052415934839 | Staff Training, Development | N |
| 22 | 01-200-200-0000-6265 | AP | 120.84- | CHEAPER THAN DIRT - REFUND | 11080499 | Programs | N |
| 21 | 01-200-200-0000-6268 | AP | 13.72 | JOLENE- TRNG MEAL | 11080499 | Training, Development | N |
| 1 | 01-049-000-0000-6266 | AP | 49.00 | SHODAN 1 TIME MEMBERSHIP | 1267-4138 | Software Fees/License Fees | N |
| 17 | 01-200-200-0000-6265 | AP | 100.83 | TAC CARRIER; MOLLE POUCHES | 1671568 | Programs | N |
| 14 | 01-200-003-0000-6339 | AP | 17.00 | #214 TRAINING- BREAKFAST | 410/NKR | Meals (Overnight) | N |
| 15 | 01-200-003-0000-6339 | AP | 17.00 | #214 TRAINING - BREAKFAST | 410/NKR | Meals (Overnight) | N |
| 4 | 01-043-000-0000-6360 | AP | 57.00 | MLS MONTHLY FEE | 500503126 | Services, Labor, Contracts, GIS Mapping | N |
| 25 | 01-110-000-0000-6335 | AP | 62.00 | TRUCK FUEL | 68133 | Gas/Vehicle Fuel Charges | N |
| 24 | 01-110-000-0000-6570 | AP | 42.00 | SWEEPER/SNOW BLOWER FUEL | 68133 | Motor Fuel & Lubricants | N |
| 19 | 01-200-003-0000-6332 | AP | 120.84 | LANA TRAINING | 85971501 | Hotel / Motel Lodging | N |
| 13 | 01-200-000-0000-6360 | AP | 5.00 | SPYPOINT CAMERA FEE | CE486A8D-0011 | Services, Labor, Contracts | N |
| 3 | 01-122-000-0000-6360 | AP | 15.99 | MONTHLY ZOOM CONTRACT<br>12/22/2023 01/21/2024 | INV232551897 | Services, Labor, Contracts | N |
| 23 | 01-200-200-0000-6265 | AP | 136.69 | STRIKE DROP LEG PLATFORM | SA100435860 | Programs | N |
| **5462** | **Bremer Bank (Elan ACH)** | | **1,937.96** | **25** Transactions | | | |
| **1 Fund Total:** | | | **1,937.96** | **General Fund** | **1 Vendors** | **25 Transactions** | |

Copyright 2010-2022 Integrated Financial Systems

| Vendor No. | Name / Account/Formula | Rpt Accr | Amount | Warrant Description / Service Dates | Invoice # / Paid On Bhf # | Account/Formula Description / On Behalf of Name | 1099 |
|---|---|---|---|---|---|---|---|
| **5462** | **Bremer Bank (Elan ACH)** | | | | | | |
| 2 | 02-120-000-0000-6357 | AP | 701.79 | POMP'S TIRE - REPAIR FOR LC<br>12/21/2023 12/21/2023 | 2280003466 | MNDVA Grant/Donations for Vets Expe | N |
| **5462** | **Bremer Bank (Elan ACH)** | | **701.79** | **1** Transactions | | | |
| **2 Fund Total:** | | | **701.79** | **Reserves Fund** | **1 Vendors** | **1 Transactions** | |

Copyright 2010-2022 Integrated Financial Systems

| Vendor No. | Name / Account/Formula | Rpt Accr | Amount | Warrant Description / Service Dates | Invoice # / Paid On Bhf # | Account/Formula Description / On Behalf of Name | 1099 |
|---|---|---|---|---|---|---|---|
| **5462** | **Bremer Bank (Elan ACH)** | | | | | | |
| 28 | 11-939-000-0000-6450 | AP | 78.43 | 39337 LOGGER'S TAPE MODEL 950C | 489633-00 | Supplies | N |
| **5462** | **Bremer Bank (Elan ACH)** | | **78.43** | **1** Transactions | | | |
| **11 Fund Total:** | | | **78.43** | **Forest Development** | **1 Vendors** | **1 Transactions** | |

Copyright 2010-2022 Integrated Financial Systems

| Vendor No. | Name / Account/Formula | Rpt Accr | Amount | Warrant Description / Service Dates | Invoice # / Paid On Bhf # | Account/Formula Description / On Behalf of Name | 1099 |
|---|---|---|---|---|---|---|---|
| **5462** | **Bremer Bank (Elan ACH)** | | | | | | |
| 27 | 19-522-000-0000-6268 | AP | 75.00 | ANNA TRAINING | 4715110303635416 | Staff Training, Development | N |
| 26 | 19-522-000-0000-6431 | AP | 255.30 | RODENTS FOR SNAKES | 4715110303635416 | Educational Supplies | N |
| **5462** | **Bremer Bank (Elan ACH)** | | **330.30** | **2** Transactions | | | |
| **19 Fund Total:** | | | **330.30** | **Long Lake Conservation Center** | **1 Vendors** | **2 Transactions** | |
| **Final Total:** | | | **3,048.48** | **4 Vendors** | **29 Transactions** | | |

Copyright 2010-2022 Integrated Financial Systems

| Recap by Fund | Fund | AMOUNT | Name |
|---|---|---|---|
| | 1 | 1,937.96 | General Fund |
| | 2 | 701.79 | Reserves Fund |
| | 11 | 78.43 | Forest Development |
| | 19 | 330.30 | Long Lake Conservation Center |
| | All Funds | 3,048.48 | Total |

Approved by, . . . . . .

. . . . . .

. . . . . .

Copyright 2010-2022 Integrated Financial Systems

| Recap by Fund | Fund | AMOUNT | Name | | |
|---|---|---|---|---|---|
| | 5 | 164.77 | Health & Human Services | | |
| | All Funds | 164.77 | Total | Approved by, | . . . . . |
| | | | | | . . . . . |
| | | | | | . . . . . |

Total Elan paid 1.4.24 = $3213.25

Copyright 2010-2022 Integrated Financial Systems

# Aitkin County

Audit List for Board **AUDITOR'S VOUCHERS ENTRIES**



Print List in Order By: 2
1 - Fund (Page Break by Fund)
2 - Department (Totals by Dept)
3 - Vendor Number
4 - Vendor Name

Page Break By: 1
1 - Page Break by Fund
2 - Page Break by Dept

Explode Dist. Formulas?: N

Paid on Behalf Of Name on Audit List?: N

Type of Audit List: D
D - Detailed Audit List
S - Condensed Audit List

Save Report Options?: N

# Aitkin County

Audit List for Board **AUDITOR'S VOUCHERS ENTRIES**



| Vendor No. | Name / Account/Formula | Rpt Accr | Amount | Warrant Description / Service Dates | Invoice # / Paid On Bhf # | Account/Formula Description / On Behalf of Name | 1099 |
|---|---|---|---|---|---|---|---|
| **931** | DEPT | | | Towns | | | |
| 1010 | **City Of Aitkin** | | | | | | |
| | 12-931-156-0000-2045 | AP | 90,727.21 | Dec 2024 Settlement | | Payable To Village Of Aitkin | N |
| **1010** | **City Of Aitkin** | | **90,727.21** | **1** Transactions | | | |
| 173 | **City Of Hill City** | | | | | | |
| | 12-931-157-0000-2045 | AP | 24,383.45 | Dec 2024 Settlement | | Payable To Village Of Hill City | N |
| **173** | **City Of Hill City** | | **24,383.45** | **1** Transactions | | | |
| 1025 | **City Of McGrath-Treasurer** | | | | | | |
| | 12-931-158-0000-2045 | AP | 466.91 | Dec 2024 Settlement | | Payable To Village Of Mcgrath | N |
| **1025** | **City Of McGrath-Treasurer** | | **466.91** | **1** Transactions | | | |
| 175 | **City Of McGregor** | | | | | | |
| | 12-931-159-0000-2045 | AP | 7,575.54 | Dec 2024 Settlement | | Payable To Village Of Mcgregor | N |
| **175** | **City Of McGregor** | | **7,575.54** | **1** Transactions | | | |
| 176 | **City Of Palisade** | | | | | | |
| | 12-931-160-0000-2045 | AP | 10,460.53 | Dec 2024 Settlement | | Payable To Village Of Palisade | N |
| **176** | **City Of Palisade** | | **10,460.53** | **1** Transactions | | | |
| 178 | **City Of Tamarack** | | | | | | |
| | 12-931-161-0000-2045 | AP | 1,813.00 | Dec 2024 Settlement | | Payable To Village Of Tamarack | N |
| **178** | **City Of Tamarack** | | **1,813.00** | **1** Transactions | | | |
| 13110 | **Lake Minnewawa Lake Improvement District** | | | | | | |
| | 12-931-163-0000-2045 | AP | 1,882.18 | Dec 2024 Settlement | | Payable To Lake Minnewawa LID | N |
| **13110** | **Lake Minnewawa Lake Improvement District** | | **1,882.18** | **1** Transactions | | | |
| 7000 | **Town Of Aitkin Treasurer** | | | | | | |
| | 12-931-101-0000-2045 | AP | 18,566.42 | Dec 2024 Settlement | | Payable To Aitkin Twp | N |
| **7000** | **Town Of Aitkin Treasurer** | | **18,566.42** | **1** Transactions | | | |
| 7001 | **Town Of Ball Bluff Treasurer** | | | | | | |
| | 12-931-102-0000-2045 | AP | 7,330.85 | Dec 2024 Settlement | | Payable To Ball Bluff Twp | N |
| **7001** | **Town Of Ball Bluff Treasurer** | | **7,330.85** | **1** Transactions | | | |
| 7002 | **Town Of Balsam Treasurer** | | | | | | |
| | 12-931-103-0000-2045 | AP | 186.90 | Dec 2024 Settlement | | Payable To Balsam Twp | N |

Copyright 2010-2022 Integrated Financial Systems

| Vendor No. | Name / Account/Formula | Rpt Accr | Amount | Warrant Description / Service Dates | Invoice # / Paid On Bhf # | Account/Formula Description / On Behalf of Name | 1099 |
|---|---|---|---|---|---|---|---|
| **7002** | **Town Of Balsam Treasurer** | | **186.90** | **1** Transactions | | | |
| 7003 | **Town Of Beaver Treasurer** | | | | | | |
| | 12-931-104-0000-2045 | AP | 1,350.32 | Dec 2024 Settlement | | Payable To Beaver Twp | N |
| **7003** | **Town Of Beaver Treasurer** | | **1,350.32** | **1** Transactions | | | |
| 7004 | **Town Of Clark Treasurer** | | | | | | |
| | 12-931-105-0000-2045 | AP | 2,021.11 | Dec 2024 Settlement | | Payable To Clark Twp | N |
| **7004** | **Town Of Clark Treasurer** | | **2,021.11** | **1** Transactions | | | |
| 7005 | **Town Of Cornish Treasurer** | | | | | | |
| | 12-931-106-0000-2045 | AP | 76.02 | Dec 2024 Settlement | | Payable To Cornish Twp | N |
| **7005** | **Town Of Cornish Treasurer** | | **76.02** | **1** Transactions | | | |
| 7006 | **Town Of Farm Island Treasurer** | | | | | | |
| | 12-931-107-0000-2045 | AP | 20,778.71 | Dec 2024 Settlement | | Payable To Farm Island Twp | N |
| **7006** | **Town Of Farm Island Treasurer** | | **20,778.71** | **1** Transactions | | | |
| 7007 | **Town Of Fleming Treasurer** | | | | | | |
| | 12-931-108-0000-2045 | AP | 9,806.30 | Dec 2024 Settlement | | Payable To Fleming Twp | N |
| **7007** | **Town Of Fleming Treasurer** | | **9,806.30** | **1** Transactions | | | |
| 7008 | **Town Of Glen Treasurer** | | | | | | |
| | 12-931-109-0000-2045 | AP | 9,146.17 | Dec 2024 Settlement | | Payable To Glen Twp | N |
| **7008** | **Town Of Glen Treasurer** | | **9,146.17** | **1** Transactions | | | |
| 7009 | **Town Of Haugen Treasurer** | | | | | | |
| | 12-931-110-0000-2045 | AP | 2,081.07 | Dec 2024 Settlement | | Payable To Haugen Twp | N |
| **7009** | **Town Of Haugen Treasurer** | | **2,081.07** | **1** Transactions | | | |
| 7010 | **Town Of Hazelton Treasurer** | | | | | | |
| | 12-931-111-0000-2045 | AP | 18,119.93 | Dec 2024 Settlement | | Payable To Hazelton Twp | N |
| **7010** | **Town Of Hazelton Treasurer** | | **18,119.93** | **1** Transactions | | | |
| 4879 | **Town Of Hill Lake Clerk-Treas** | | | | | | |
| | 12-931-112-0000-2045 | AP | 5,593.89 | Dec 2024 Settlement | | Payable To Hill Lake Twp | N |
| **4879** | **Town Of Hill Lake Clerk-Treas** | | **5,593.89** | **1** Transactions | | | |
| 7011 | **Town Of Idun Treasurer** | | | | | | |

Copyright 2010-2022 Integrated Financial Systems

| Vendor No. | Name / Account/Formula | Rpt Accr | Amount | Warrant Description / Service Dates | Invoice # / Paid On Bhf # | Account/Formula Description / On Behalf of Name | 1099 |
|---|---|---|---|---|---|---|---|
| | 12-931-113-0000-2045 | AP | 5,441.73 | Dec 2024 Settlement | | Payable To Idun Twp | N |
| **7011** | **Town Of Idun Treasurer** | | **5,441.73** | **1** Transactions | | | |
| 7012 | **Town Of Jevne Treasurer** | | | | | | |
| | 12-931-114-0000-2045 | AP | 3,171.55 | Dec 2024 Settlement | | Payable To Jevne Twp | N |
| **7012** | **Town Of Jevne Treasurer** | | **3,171.55** | **1** Transactions | | | |
| 7013 | **Town Of Kimberly Treasurer** | | | | | | |
| | 12-931-115-0000-2045 | AP | 11,317.94 | Dec 2024 Settlement | | Payable To Kimberly Twp | N |
| **7013** | **Town Of Kimberly Treasurer** | | **11,317.94** | **1** Transactions | | | |
| 7014 | **Town Of Lakeside Treasurer** | | | | | | |
| | 12-931-116-0000-2045 | AP | 24,706.77 | Dec 2024 Settlement | | Payable To Lakeside Twp | N |
| **7014** | **Town Of Lakeside Treasurer** | | **24,706.77** | **1** Transactions | | | |
| 7015 | **Town Of Lee Treasurer** | | | | | | |
| | 12-931-117-0000-2045 | AP | 1,228.10 | Dec 2024 Settlement | | Payable To Lee Twp | N |
| **7015** | **Town Of Lee Treasurer** | | **1,228.10** | **1** Transactions | | | |
| 7016 | **Town Of Libby Treasurer** | | | | | | |
| | 12-931-118-0000-2045 | AP | 1,247.16 | Dec 2024 Settlement | | Payable To Libby Twp | N |
| **7016** | **Town Of Libby Treasurer** | | **1,247.16** | **1** Transactions | | | |
| 7017 | **Town Of Logan Treasurer** | | | | | | |
| | 12-931-119-0000-2045 | AP | 10,168.01 | Dec 2024 Settlement | | Payable To Logan Twp | N |
| **7017** | **Town Of Logan Treasurer** | | **10,168.01** | **1** Transactions | | | |
| 7018 | **Town Of Macville Treasurer** | | | | | | |
| | 12-931-120-0000-2045 | AP | 539.40 | Dec 2024 Settlement | | Payable To Macville Twp | N |
| **7018** | **Town Of Macville Treasurer** | | **539.40** | **1** Transactions | | | |
| 7019 | **Town Of Malmo Treasurer** | | | | | | |
| | 12-931-121-0000-2045 | AP | 9,620.05 | Dec 2024 Settlement | | Payable To Malmo Twp | N |
| **7019** | **Town Of Malmo Treasurer** | | **9,620.05** | **1** Transactions | | | |
| 7020 | **Town Of Mcgregor - Treasurer** | | | | | | |
| | 12-931-122-0000-2045 | AP | 749.15 | Dec 2024 Settlement | | Payable To Mcgregor Twp | N |
| **7020** | **Town Of Mcgregor - Treasurer** | | **749.15** | **1** Transactions | | | |

Copyright 2010-2022 Integrated Financial Systems

| Vendor No. | Name / Account/Formula | Rpt Accr | Amount | Warrant Description / Service Dates | Invoice # / Paid On Bhf # | Account/Formula Description / On Behalf of Name | 1099 |
|---|---|---|---|---|---|---|---|
| 7021 | **Town Of Millward Treasurer** | | | | | | |
| | 12-931-141-0000-2045 | AP | 1,713.33 | Dec 2024 Settlement | | Payable To Millward Twp | N |
| **7021** | **Town Of Millward Treasurer** | | **1,713.33** | **1** Transactions | | | |
| 7022 | **Town Of Morrison Treasurer** | | | | | | |
| | 12-931-123-0000-2045 | AP | 10,637.38 | Dec 2024 Settlement | | Payable To Morrison Twp | N |
| **7022** | **Town Of Morrison Treasurer** | | **10,637.38** | **1** Transactions | | | |
| 7023 | **Town Of Nordland Treasurer** | | | | | | |
| | 12-931-124-0000-2045 | AP | 22,586.89 | Dec 2024 Settlement | | Payable To Nordland Twp | N |
| **7023** | **Town Of Nordland Treasurer** | | **22,586.89** | **1** Transactions | | | |
| 7024 | **Town Of Pliny Treasurer** | | | | | | |
| | 12-931-125-0000-2045 | AP | 704.08 | Dec 2024 Settlement | | Payable To Pliny Twp | N |
| **7024** | **Town Of Pliny Treasurer** | | **704.08** | **1** Transactions | | | |
| 7025 | **Town Of Rice River Treasurer** | | | | | | |
| | 12-931-126-0000-2045 | AP | 5,174.82 | Dec 2024 Settlement | | Payable To Rice River Twp | N |
| **7025** | **Town Of Rice River Treasurer** | | **5,174.82** | **1** Transactions | | | |
| 7026 | **Town Of Salo Treasurer** | | | | | | |
| | 12-931-127-0000-2045 | AP | 4,090.31 | Dec 2024 Settlement | | Payable To Salo Twp | N |
| **7026** | **Town Of Salo Treasurer** | | **4,090.31** | **1** Transactions | | | |
| 7027 | **Town Of Seavey Treasurer** | | | | | | |
| | 12-931-128-0000-2045 | AP | 1,133.82 | Dec 2024 Settlement | | Payable To Seavey Twp | N |
| **7027** | **Town Of Seavey Treasurer** | | **1,133.82** | **1** Transactions | | | |
| 7028 | **Town Of Shamrock Treasurer** | | | | | | |
| | 12-931-129-0000-2045 | AP | 44,184.40 | Dec 2024 Settlement | | Payable To Shamrock Twp | N |
| **7028** | **Town Of Shamrock Treasurer** | | **44,184.40** | **1** Transactions | | | |
| 7029 | **Town Of Spalding Treasurer** | | | | | | |
| | 12-931-130-0000-2045 | AP | 2,891.72 | Dec 2024 Settlement | | Payable To Spalding Twp | N |
| **7029** | **Town Of Spalding Treasurer** | | **2,891.72** | **1** Transactions | | | |
| 7030 | **Town Of Spencer Treasurer** | | | | | | |
| | 12-931-131-0000-2045 | AP | 15,335.64 | Dec 2024 Settlement | | Payable To Spencer Twp | N |

Copyright 2010-2022 Integrated Financial Systems

| Vendor No. | Name / Account/Formula | Rpt Accr | Amount | Warrant Description / Service Dates | Invoice # / Paid On Bhf # | Account/Formula Description / On Behalf of Name | 1099 |
|---|---|---|---|---|---|---|---|
| **7030** | **Town Of Spencer Treasurer** | | **15,335.64** | **1** Transactions | | | |
| 7031 | **Town Of Turner Treasurer** | | | | | | |
| | 12-931-132-0000-2045 | AP | 5,093.96 | Dec 2024 Settlement | | Payable To Turner Twp | N |
| **7031** | **Town Of Turner Treasurer** | | **5,093.96** | **1** Transactions | | | |
| 7032 | **Town Of Verdon Treasurer** | | | | | | |
| | 12-931-133-0000-2045 | AP | 467.46 | Dec 2024 Settlement | | Payable To Verdon Twp | N |
| **7032** | **Town Of Verdon Treasurer** | | **467.46** | **1** Transactions | | | |
| 7033 | **Town Of Wagner Treasurer** | | | | | | |
| | 12-931-134-0000-2045 | AP | 3,308.19 | Dec 2024 Settlement | | Payable To Wagner Twp | N |
| **7033** | **Town Of Wagner Treasurer** | | **3,308.19** | **1** Transactions | | | |
| 7034 | **Town Of Waukenabo Treasurer** | | | | | | |
| | 12-931-135-0000-2045 | AP | 10,703.40 | Dec 2024 Settlement | | Payable To Waukenabo Twp | N |
| **7034** | **Town Of Waukenabo Treasurer** | | **10,703.40** | **1** Transactions | | | |
| 7035 | **Town Of Wealthwood Treasurer** | | | | | | |
| | 12-931-136-0000-2045 | AP | 6,381.31 | Dec 2024 Settlement | | Payable To Wealthwood Twp | N |
| **7035** | **Town Of Wealthwood Treasurer** | | **6,381.31** | **1** Transactions | | | |
| 7036 | **Town Of White Pine Treasurer** | | | | | | |
| | 12-931-137-0000-2045 | AP | 288.47 | Dec 2024 Settlement | | Payable To White Pine Twp | N |
| **7036** | **Town Of White Pine Treasurer** | | **288.47** | **1** Transactions | | | |
| 7037 | **Town Of Williams Treasurer** | | | | | | |
| | 12-931-138-0000-2045 | AP | 3,312.62 | Dec 2024 Settlement | | Payable To Williams Twp | N |
| **7037** | **Town Of Williams Treasurer** | | **3,312.62** | **1** Transactions | | | |
| 7038 | **Town Of Workman - Treasurer** | | | | | | |
| | 12-931-139-0000-2045 | AP | 7,012.79 | Dec 2024 Settlement | | Payable To Workman Twp | N |
| **7038** | **Town Of Workman - Treasurer** | | **7,012.79** | **1** Transactions | | | |
| **931** | **DEPT Total:** | | **445,576.96** | **Towns** | **47 Vendors** | **47 Transactions** | |
| **932** | DEPT | | | Schools | | | |
| 393 | **ISD 1 Aitkin-Treasurer** | | | | | | |
| | 12-932-000-0000-6801 | AP | 165,251.18 | Dec 2024 Settlement | | Appropriations | N |

Copyright 2010-2022 Integrated Financial Systems

| Vendor No. | Name / Account/Formula | Rpt Accr | Amount | Warrant Description / Service Dates | Invoice # / Paid On Bhf # | Account/Formula Description / On Behalf of Name | 1099 |
|---|---|---|---|---|---|---|---|
| **393** | **ISD 1 Aitkin-Treasurer** | | **165,251.18** | **1** Transactions | | | |
| 1985 | **ISD 182 Crosby-Treasurer** | | | | | | |
| | 12-932-000-0000-6801 | AP | 137.92 | Dec 2024 Settlement | | Appropriations | N |
| **1985** | **ISD 182 Crosby-Treasurer** | | **137.92** | **1** Transactions | | | |
| 392 | **ISD 2 Hill City-Treasurer** | | | | | | |
| | 12-932-000-0000-6801 | AP | 23,314.16 | Dec 2024 Settlement | | Appropriations | N |
| **392** | **ISD 2 Hill City-Treasurer** | | **23,314.16** | **1** Transactions | | | |
| 1983 | **ISD 2165 Hinckley Finlayson-Treasurer** | | | | | | |
| | 12-932-000-0000-6801 | AP | 9,029.06 | Dec 2024 Settlement | | Appropriations | N |
| **1983** | **ISD 2165 Hinckley Finlayson-Treasurer** | | **9,029.06** | **1** Transactions | | | |
| 1979 | **ISD 2580 East Central-Treasurer** | | | | | | |
| | 12-932-000-0000-6801 | AP | 1,763.85 | Dec 2024 Settlement | | Appropriations | N |
| **1979** | **ISD 2580 East Central-Treasurer** | | **1,763.85** | **1** Transactions | | | |
| 395 | **ISD 4 McGregor-Treasurer** | | | | | | |
| | 12-932-000-0000-6801 | AP | 68,841.76 | Dec 2024 Settlement | | Appropriations | N |
| **395** | **ISD 4 McGregor-Treasurer** | | **68,841.76** | **1** Transactions | | | |
| 1982 | **ISD 473 Isle-Treasurer** | | | | | | |
| | 12-932-000-0000-6801 | AP | 17,066.39 | Dec 2024 Settlement | | Appropriations | N |
| **1982** | **ISD 473 Isle-Treasurer** | | **17,066.39** | **1** Transactions | | | |
| 1981 | **ISD 577 Willow River-Treasurer** | | | | | | |
| | 12-932-000-0000-6801 | AP | 393.78 | Dec 2024 Settlement | | Appropriations | N |
| **1981** | **ISD 577 Willow River-Treasurer** | | **393.78** | **1** Transactions | | | |
| 394 | **ISD 698 Floodwood-Treasurer** | | | | | | |
| | 12-932-000-0000-6801 | AP | 201.16 | Dec 2024 Settlement | | Appropriations | N |
| **394** | **ISD 698 Floodwood-Treasurer** | | **201.16** | **1** Transactions | | | |
| 1984 | **ISD 95 Cromwell-Wright-Treasurer** | | | | | | |
| | 12-932-000-0000-6801 | AP | 1.61 | Dec 2024 Settlement | | Appropriations | N |
| **1984** | **ISD 95 Cromwell-Wright-Treasurer** | | **1.61** | **1** Transactions | | | |

Copyright 2010-2022 Integrated Financial Systems

| Vendor No. | Name / Account/Formula | Rpt Accr | Amount | Warrant Description / Service Dates | Invoice # / Paid On Bhf # | Account/Formula Description / On Behalf of Name | 1099 |
|---|---|---|---|---|---|---|---|
| **932** | **DEPT Total:** | | **286,000.87** | **Schools** | **10 Vendors** | **10 Transactions** | |
| **12** | **Fund Total:** | | **731,577.83** | **Townships/Cities/ARDC/Ambulan** | | **57 Transactions** | |
| | **Final Total:** | | **731,577.83** | **57 Vendors** | **57 Transactions** | | |

Copyright 2010-2022 Integrated Financial Systems

| Recap by Fund | Fund | AMOUNT | Name |
|---|---|---|---|
| | 12 | 731,577.83 | Townships/Cities/ARDC/Ambulan |
| | All Funds | 731,577.83 | Total |

Approved by, . . . . . .

. . . . . .

. . . . . .

Copyright 2010-2022 Integrated Financial Systems

# Board of County Commissioners Agenda Request

**2F**
Agenda Item #

**Requested Meeting Date:** February 13, 2024

**Title of Item:** Consumption & Display Permits - Larson's Barn LLC

| | |
|---|---|
| ☐ REGULAR AGENDA<br>☑ CONSENT AGENDA<br>☐ INFORMATION ONLY | **Action Requested:**<br>☑ Approve/Deny Motion<br>☐ Adopt Resolution (attach draft)<br>☐ Direction Requested<br>☐ Discussion Item<br>☐ Hold Public Hearing*<br>**provide copy of hearing notice that was published* |

| | |
|---|---|
| **Submitted by:**<br>Christy M. Bishop | **Department:**<br>Auditor's Office |
| **Presenter (Name and Title):**<br>n/a | **Estimated Time Needed:**<br>n/a |

**Summary of Issue:**

Application for Consumption and Display Permit : LARSON'S BARN LLC located at 47987 240th Ave McGregor, MN 55760

**Alternatives, Options, Effects on Others/Comments:**

**Recommended Action/Motion:**
Motion to approve Application for Consumption and Display Permit: LARSON'S BARN LLC

**Financial Impact:**
*Is there a cost associated with this request?* ☐ *Yes* ☑ *No*
*What is the total cost, with tax and shipping? $*
*Is this budgeted?* ☐ *Yes* ☑ *No* *Please Explain:*

Legally binding agreements must have County Attorney approval prior to submission.

# Board of County Commissioners Agenda Request

**2G**
Agenda Item #

**Requested Meeting Date:** February 13, 2024

**Title of Item:** Consumption & Display Permits - HIDDEN MEADOWS CAMPGROUND

| | |
|---|---|
| ☐ REGULAR AGENDA<br>☑ CONSENT AGENDA<br>☐ INFORMATION ONLY | **Action Requested:**<br>☑ Approve/Deny Motion<br>☐ Adopt Resolution (attach draft)<br>☐ Direction Requested<br>☐ Discussion Item<br>☐ Hold Public Hearing*<br>**provide copy of hearing notice that was published* |

| | |
|---|---|
| **Submitted by:**<br>Christy M. Bishop | **Department:**<br>Auditor's Office |
| **Presenter (Name and Title):**<br>n/a | **Estimated Time Needed:**<br>n/a |

**Summary of Issue:**

Application for Consumption and Display Permit : HIDDEN MEADOWS CAMPGROUND ON BLIND LAKE located at 42206 438th Ln, Aitkin, MN 56431

**Alternatives, Options, Effects on Others/Comments:**

**Recommended Action/Motion:**
Motion to approve Application for Consumption and Display Permit: Hidden Meadows Campground on Blind Lake

**Financial Impact:**
*Is there a cost associated with this request?* ☐ *Yes* ☑ *No*
*What is the total cost, with tax and shipping? $*
*Is this budgeted?* ☐ *Yes* ☑ *No* *Please Explain:*

Legally binding agreements must have County Attorney approval prior to submission.

# Board of County Commissioners Agenda Request

**2H**
Agenda Item #

**Requested Meeting Date:** February 13, 2024

**Title of Item:** Consumption & Display Permits - MINNEWAWA SPORTSMEN'S CLUB

| | |
|---|---|
| ☐ REGULAR AGENDA<br>☑ CONSENT AGENDA<br>☐ INFORMATION ONLY | **Action Requested:**<br>☑ Approve/Deny Motion<br>☐ Adopt Resolution (attach draft)<br>☐ Direction Requested<br>☐ Discussion Item<br>☐ Hold Public Hearing*<br>**provide copy of hearing notice that was published* |

| | |
|---|---|
| **Submitted by:**<br>Christy M. Bishop | **Department:**<br>Auditor's Office |
| **Presenter (Name and Title):**<br>n/a | **Estimated Time Needed:**<br>n/a |

**Summary of Issue:**

Application for Consumption and Display Permit : MINNEWAWA SPORTSMEN'S CLUB, located at 20322 Goshawk St. McGregor, MN 55760

**Alternatives, Options, Effects on Others/Comments:**

**Recommended Action/Motion:**
Motion to approve Application for Consumption and Display Permit: Minnewawa Sportsmen's Club

**Financial Impact:**
*Is there a cost associated with this request?* ☐ *Yes* ☑ *No*
*What is the total cost, with tax and shipping? $*
*Is this budgeted?* ☐ *Yes* ☑ *No* *Please Explain:*

Legally binding agreements must have County Attorney approval prior to submission.

# Board of County Commissioners Agenda Request

**2I**
Agenda Item #

**Requested Meeting Date:** February 13, 2024

**Title of Item:** LG220 Application for Exempt Permit - Lawler Area Community Club

| | |
|---|---|
| ☐ REGULAR AGENDA<br>☑ CONSENT AGENDA<br>☐ INFORMATION ONLY | **Action Requested:**<br>☐ Approve/Deny Motion<br>☑ Adopt Resolution (attach draft)<br>☐ Direction Requested<br>☐ Discussion Item<br>☐ Hold Public Hearing*<br>**provide copy of hearing notice that was published* |

| | |
|---|---|
| **Submitted by:**<br>Christy M. Bishop | **Department:**<br>Auditor's Office |
| **Presenter (Name and Title):** | **Estimated Time Needed:** |

**Summary of Issue:**

Event Date: April 13, 2024
Gambling Permit Application for Lawler Area Community Club. Raffle to be held at Jackson's Hole 36232 Kestrel Ave McGregor, MN 55760 - Salo Township

**Alternatives, Options, Effects on Others/Comments:**

**Recommended Action/Motion:**
Motion to adopt attached resolution.

**Financial Impact:**
*Is there a cost associated with this request?* ☐ *Yes* ☑ *No*
*What is the total cost, with tax and shipping? $*
*Is this budgeted?* ☐ *Yes* ☑ *No* *Please Explain:*

Legally binding agreements must have County Attorney approval prior to submission.

**CERTIFIED COPY OF RESOLUTION OF COUNTY BOARD OF AITKIN COUNTY, MINNESOTA**

ADOPTED February 13, 2024

By Commissioner: xxx **20240213-xxx**

**LG220 Permit – Lawler Area Community Club**

**BE IT RESOLVED**, The Aitkin County Board of Commissioners agrees to approve the Application for Exempt Permit – Form LG220 – of the Lawler Area Community Club, at the following location – Jackson's Hole, which has an address of 36232 Kestrel Ave McGregor, MN 55760 – Salo Township. (Note: Date of activity for Raffle – April 13, 2024)

Commissioner xxx moved the adoption of the resolution and it was declared adopted upon the following vote

xxx MEMBERS PRESENT xx Members Voting Yes

**STATE OF MINNESOTA}**
**COUNTY OF AITKIN}**

I, Jessica Seibert, County Administrator, Aitkin County, Minnesota do hereby certify that I have compared the foregoing with the original resolution filed in the Administration Office of Aitkin County in Aitkin, Minnesota as stated in the minutes of the proceedings of said Board on the 13th day of February 2024, and that the same is a true and correct copy of the whole thereof.

**Witness my hand and seal this 13th day of February 2024**

Jessica Seibert
County Administrator

# Board of County Commissioners Agenda Request

**2J**
Agenda Item #

**Requested Meeting Date:** 2/13/2024

**Title of Item:** Search & Rescue Donation

| | | |
|---|---|---|
| ☐ REGULAR AGENDA | **Action Requested:** | ☐ Direction Requested |
| ☑ CONSENT AGENDA | ☐ Approve/Deny Motion | ☐ Discussion Item |
| ☐ INFORMATION ONLY | ☑ Adopt Resolution (attach draft) | ☐ Hold Public Hearing* |
| | **provide copy of hearing notice that was published* | |

| | |
|---|---|
| **Submitted by:** Sheriff Dan Guida | **Department:** Sheriff |
| **Presenter (Name and Title):** Sheriff Dan Guida | **Estimated Time Needed:** |

**Summary of Issue:**

The BNSF Railway Foundation has donated $5,000.00 to the all-volunteer Aitkin County Search & Rescue group to assist with the drone project & training.

**Alternatives, Options, Effects on Others/Comments:**

**Recommended Action/Motion:**
Recommend accepting donation

**Financial Impact:**
*Is there a cost associated with this request?* ☐ *Yes* ☑ *No*
*What is the total cost, with tax and shipping? $*
*Is this budgeted?* ☐ *Yes* ☐ *No* *Please Explain:*

Legally binding agreements must have County Attorney approval prior to submission.

**CERTIFIED COPY OF RESOLUTION OF COUNTY BOARD OF AITKIN COUNTY, MINNESOTA**

ADOPTED February 13, 2024

By Commissioner: xxx **20240213-xxx**

## Accept Donation – SAR – BNSF Railway Foundation

**WHEREAS,** Aitkin County is generally authorized to accept donations of real and personal property with a 2/3 majority vote pursuant to Minnesota Statutes Section 465.03 for the benefit of its citizens.

**WHEREAS,** the following persons and entities have offered to contribute the cash amounts set forth below to the county:

| | |
|---|---|
| BNSF Railway Foundation | $5,000.00 |

**WHEREAS,** the terms or conditions of the donations, if any, are as follows:

| | |
|---|---|
| BNSF Railway Foundation | Aitkin County Search and Rescue |

**WHEREAS,** all such donations have been contributed to the county for the benefit of its citizens, as allowed by law.

**NOW THEREFORE BE IT RESOLVED,** the Aitkin County Board of Commissioners finds that it is appropriate to accept the donations offered.

Commissioner xxx seconded the adoption of the resolution and it was declared adopted upon the following vote

xxx MEMBERS PRESENT All Members Voting xxx

**STATE OF MINNESOTA}**
**COUNTY OF AITKIN}**

I, Jessica Seibert, County Administrator, Aitkin County, Minnesota do hereby certify that I have compared the foregoing with the original resolution filed in the Administration Office of Aitkin County in Aitkin, Minnesota as stated in the minutes of the proceedings of said Board on the 13th day of February 2024, and that the same is a true and correct copy of the whole thereof.

**Witness my hand and seal this 13th day of February 2024**

Jessica Seibert
County Administrator

# Aitkin County

Audit List for Board **MANUAL WARRANTS/VOIDS/CORRECTIONS**



| | | |
|---|---|---|
| Print List in Order By: | 1 | 1 - Fund (Page Break by Fund)<br>2 - Department (Totals by Dept)<br>3 - Vendor Number<br>4 - Vendor Name |
| Explode Dist. Formulas?: | Y | |
| Paid on Behalf Of Name on Audit List?: | N | |
| Type of Audit List: | D | D - Detailed Audit List<br>S - Condensed Audit List |
| Save Report Options?: | N | |

| Vendor No. | Name / Account/Formula | Rpt Accr | Amount | Warrant Description / Service Dates | Invoice # / Paid On Bhf # | Account/Formula Description / On Behalf of Name | 1099 |
|---|---|---|---|---|---|---|---|
| **8410** | **Bremer Bank** | | | | | | |
| 9 | 01-044-904-0000-6379 | | 630.25 | WEX DECEMBER 2023 FEE | 0001878678-IN | Flex Services, Labor, Etc. | N |
| 4 | 01-044-904-0000-6360 | | 25.00 | MED FSA CLAIMS 2023 | 01/14/2024 | Flex Plan Withdrawals | N |
| 5 | 01-044-904-0000-6360 | | 208.18 | DEP CARE FSA CLAIMS 2023 | 01/16/2024 | Flex Plan Withdrawals | N |
| 6 | 01-044-904-0000-6360 | | 639.62 | MED FSA CLAIMS 2023 | 01/16/2024 | Flex Plan Withdrawals | N |
| 7 | 01-044-904-0000-6360 | | 25.00 | MED FSA CLAIMS 2023 | 01/21/2024 | Flex Plan Withdrawals | N |
| 8 | 01-044-904-0000-6360 | | 208.34 | DEP CARE FSA CLAIMS 2023 | 01/22/2024 | Flex Plan Withdrawals | N |
| **8410** | **Bremer Bank** | | **1,736.39** | **6** Transactions | | | |
| **1 Fund Total:** | | | **1,736.39** | **General Fund** | **1 Vendors** | **6 Transactions** | |

Copyright 2010-2022 Integrated Financial Systems

| Vendor No. | Name / Account/Formula | Rpt Accr | Amount | Warrant Description / Service Dates | Invoice # / Paid On Bhf # | Account/Formula Description / On Behalf of Name | 1099 |
|---|---|---|---|---|---|---|---|
| **8410** | **Bremer Bank** | | | | | | |
| 1 | 09-000-000-0000-2058 | | 98,815.36 | P3 2023 STATE GEN TAX | P3-2023 | State General Tax-Education | N |
| **8410** | **Bremer Bank** | | **98,815.36** | **1** Transactions | | | |
| **9 Fund Total:** | | | **98,815.36** | **State** | **1 Vendors** | **1 Transactions** | |

Copyright 2010-2022 Integrated Financial Systems

| Vendor No. | Name / Account/Formula | Rpt Accr | Amount | Warrant Description / Service Dates | Invoice # / Paid On Bhf # | Account/Formula Description / On Behalf of Name | 1099 |
|---|---|---|---|---|---|---|---|
| **8410** | **Bremer Bank** | | | | | | |
| 2 | 19-522-000-0000-6267 | | 120.82 | TOTAL SERVICE CHARGES | 461201217886 | Credit Card Fees | N |
| 3 | 19-522-000-0000-6267 | | 33.20 | TOTAL FEES | 461201217886 | Credit Card Fees | N |
| **8410** | **Bremer Bank** | | **154.02** | **2** Transactions | | | |
| **19 Fund Total:** | | | **154.02** | **Long Lake Conservation Center** | **1 Vendors** | **2 Transactions** | |
| **Final Total:** | | | **100,705.77** | **3 Vendors** | **9 Transactions** | | |

Copyright 2010-2022 Integrated Financial Systems

| Recap by Fund | Fund | AMOUNT | Name |
|---|---|---|---|
| | 1 | 1,736.39 | General Fund |
| | 9 | 98,815.36 | State |
| | 19 | 154.02 | Long Lake Conservation Center |
| | All Funds | 100,705.77 | Total |

Approved by, . . . . . .

. . . . . .

. . . . . .

Copyright 2010-2022 Integrated Financial Systems

# Board of County Commissioners
# Agenda Request

**2L**
Agenda Item #

**Requested Meeting Date:** February 13, 2024

**Title of Item:** Application for Temp On Sale Liquor License - Wealthwood Rod & Gun Club

| | | |
|---|---|---|
| ☐ REGULAR AGENDA<br>☑ CONSENT AGENDA<br>☐ INFORMATION ONLY | **Action Requested:**<br>☐ Approve/Deny Motion<br>☑ Adopt Resolution (attach draft) | ☐ Direction Requested<br>☐ Discussion Item<br>☐ Hold Public Hearing*<br>**provide copy of hearing notice that was published* |

| | |
|---|---|
| **Submitted by:**<br>Christy M. Bishop | **Department:**<br>Auditor's Office |
| **Presenter (Name and Title):** | **Estimated Time Needed:** |

**Summary of Issue:**

Wealthwood Rod & Gun Club Application for Temporary On Sale Liquor License for April 26, 2024.

Event will take place at 23573 420th Place, Aitkin, MN 56431

**Alternatives, Options, Effects on Others/Comments:**

**Recommended Action/Motion:**
To approve the Temporary On-Sale Liquor License for Wealthwood Rod & Gun Club for April 26, 2024

**Financial Impact:**
*Is there a cost associated with this request?* ☐ *Yes* ☑ *No*
*What is the total cost, with tax and shipping? $*
*Is this budgeted?* ☐ *Yes* ☑ *No* *Please Explain:*

Legally binding agreements must have County Attorney approval prior to submission.

**CERTIFIED COPY OF RESOLUTION OF COUNTY BOARD OF AITKIN COUNTY, MINNESOTA**

ADOPTED February 13, 2024

By Commissioner: xxx **20240213-xxx**

## Temporary On-Sale Liquor License

**NOW THEREFORE BE IT RESOLVED,** the Aitkin County Board of Commissioners approves a Temporary **On-Sale Liquor License** to Wealthwood Rod & Gun Club for April 26, 2024.

Wealthwood Rod & Gun Club – Hazelton Township – 23573 420th Place Aitkin, MN 56431

Commissioner xxx moved the adoption of the resolution and it was declared adopted upon the following vote

xxx MEMBERS PRESENT All Members Voting xxx

**STATE OF MINNESOTA}**
**COUNTY OF AITKIN}**

I, Jessica Seibert, County Administrator, Aitkin County, Minnesota do hereby certify that I have compared the foregoing with the original resolution filed in the Administration Office of Aitkin County in Aitkin, Minnesota as stated in the minutes of the proceedings of said Board on the 13th day of February 2024, and that the same is a true and correct copy of the whole thereof.

**Witness my hand and seal this 13th day of February, 2024**

Jessica Seibert
County Administrator

# Board of County Commissioners Agenda Request

**2M**
Agenda Item #

**Requested Meeting Date:** 2-13-24

**Title of Item:** Final Contract Payment (#20222)

| | |
|---|---|
| ☐ REGULAR AGENDA<br>☑ CONSENT AGENDA<br>☐ INFORMATION ONLY | **Action Requested:**<br>☐ Approve/Deny Motion<br>☑ Adopt Resolution (attach draft)<br>☐ Direction Requested<br>☐ Discussion Item<br>☐ Hold Public Hearing*<br>**provide copy of hearing notice that was published* |

| | |
|---|---|
| **Submitted by:**<br>John Welle | **Department:**<br>Highway Department |
| **Presenter (Name and Title):**<br>NA | **Estimated Time Needed:**<br>NA |

**Summary of Issue:**

Authorization by the following resolution is requested to make final payment to Redstone Construction, LLC - Mora, MN in the amount of $9,861.44 for Contract No. 20222, which included replacement of the bridge on County Highway 18 over the Willow River.

The final contract amount of $986,143.91 is 1.6% above the bid amount of $970,990.60. The increased cost was due to increased lengths of steel piling needing to be driven to achieve the required load bearing capacity.

Resolution:
WHEREAS, Contract No. 20222 has in all been completed, and the County Board being fully advised in the premises.

NOW THEREFORE BE IT RESOLVED, That the Aitkin County Board of Commissioners does hereby accept said completed contract for and on behalf of the County of Aitkin and authorize final payment to Redstone Construction, LLC in the amount of $9,861.44.

**Alternatives, Options, Effects on Others/Comments:**

**Recommended Action/Motion:**
Approve resolution

**Financial Impact:**
*Is there a cost associated with this request?* ☑ *Yes* ☐ *No*
*What is the total cost, with tax and shipping?* $ 9,861.44
*Is this budgeted?* ☑ *Yes* ☐ *No* *Please Explain:*

Legally binding agreements must have County Attorney approval prior to submission.

**CERTIFIED COPY OF RESOLUTION OF COUNTY BOARD OF AITKIN COUNTY, MINNESOTA**

ADOPTED February 13, 2024

By Commissioner: xxx **20240213-xxx**

## Final Contract Payment (#20222)

**WHEREAS,** Contract No. 20222 has in all been completed, and the County Board being fully advised in the premises.

**NOW THEREFORE BE IT RESOLVED,** That the Aitkin County Board of Commissioners does hereby accept said completed contract for and on behalf of the County of Aitkin and authorize final payment to Redstone Construction, LLC in the amount of $9,861.44.

Commissioner xxx seconded the adoption of the resolution and it was declared adopted upon the following vote

xxx MEMBERS PRESENT All Members Voting xxx

**STATE OF MINNESOTA}**
**COUNTY OF AITKIN}**

I, Jessica Seibert, County Administrator, Aitkin County, Minnesota do hereby certify that I have compared the foregoing with the original resolution filed in the Administration Office of Aitkin County in Aitkin, Minnesota as stated in the minutes of the proceedings of said Board on the 13th day of February 2024, and that the same is a true and correct copy of the whole thereof.

**Witness my hand and seal this 13th day of February 2024**

Jessica Seibert
County Administrator

**Aitkin County Highway Department**
**1211 Air Park Drive**
**Aitkin, MN 56431**



**Contract Number:** 20222
**Final Pay Request Number:** 7

| Project Number | Project Description |
|---|---|
| SAP 001-618-005 | Bridge Replacement over Willow River on CSAH 18 |

| | | | |
|---|---|---|---|
| **Contractor:** | Redstone Construction, LLC<br>2183 HWY 65 N.<br>Mora, MN 55051 | **Vendor Number:**<br>**Up To Date:**<br>**Warrant #** _____ | 9741<br>12/22/2023<br>**Date** _____ |

| **Contract Amount** | | **Funds Encumbered** | |
|---|---|---|---|
| Original Contract | $970,990.60 | Original | $970,990.60 |
| Contract Changes | ($550.00) | Additional | N/A |
| Revised Contract | $970,440.60 | Total | $970,990.60 |

| **Work Certified To Date** | |
|---|---|
| Base Bid Items | $986,693.91 |
| Contract Changes | ($550.00) |
| Material On Hand | $0.00 |
| Total | $986,143.91 |

| Project | Work Certified This Request | Work Certified To Date | Less Amount Retained | Less Previous Payments | Amount Paid This Request | Total Amount Paid To Date |
|---|---|---|---|---|---|---|
| SAP 001-618-005 | $0.00 | $986,143.91 | $0.00 | $976,282.47 | $9,861.44 | $986,143.91 |

| Work Certified This Request | Work Certified To Date | Less Amount Retained | Less Previous Payments | Amount Paid This Request | Total Amount Paid To Date |
|---|---|---|---|---|---|
| $0.00 | $986,143.91 | $0.00 | $976,282.47 | $9,861.44 | $986,143.91 |
| | Percent: Retained: 0% | | Percent Complete: 101.62 % | | |
| | | | | **Amount Paid this Final Pay Request: $9,861.44** | |

I hereby certify that a Final Examination has been made of the noted Contract, that the Contract has been completed, that the entire amount of Work Shown in this Final Voucher has been performed and the Total Value of the Work Performed in accordance with, and pursuant to, the terms of the Contract is as shown in this Final Voucher.

John Welle — 12-26-23 (Date)
John Welle – P.E. No. 24340
Aitkin County Highway Engineer

_____ — _____ (Date)
Kirk Peysar
Aitkin County Auditor

Mark R. Lamm — 1/3/2024 (Date)
Redstone Construction, LLC

3-307-6262
Account Number

**Aitkin County Highway Department**
**1211 Air Park Drive**
**Aitkin, MN 56431**



Project No. : SAP 001-618-005
Final Pay Request No. : 7
Contract No.: 20222

**Certificate of Final Contract Acceptance**
**Final Voucher Number: 7**

This is to certify that to the best of my knowledge, the items of work shown in the Statement of Work Certified herein have actually furnished in accordance with the Plans and Specifications. This Project has been completed in accordance with the Laws, Standards and Procedures of as they apply to projects in this category, and if applicable, approved by the Federal Highway Administration.

Dated 12-26-23 Signature John Walle County/City/Project Engineer

The undersigned Contractor hereby certifies that the work described has been performed in accordance with the terms of the Contract, and agrees that the Final Value of Work Certified on this Contract is $986,143.91 and agrees to the amount of $9,861.44 as Final Payment on this Contract in accordance with this Final Voucher.

Contractor: Redstone Construction, LLC By Nate R. Larson

And _____ And _____ State of ,

On This 3 Day Jan, 2024, Before me appeared Nate R. Larson To me known to

(Individual Acknowledgment)

be the person who executed the foregoing Acceptance and Acknowledged that he/she executed the same as _____ free to act and deed

(Corporate Acknowledgment)

Nate R. Larson And _____, to me personally known, who, being each by me duly sworn

each did say that they are respectively the President and _____ of the Redstone Construction, LLC Corporation named in the foregoing instrument, and that the seal affixed to said instrument is the Corporate Seal of said Corporation, and the said instrument was signed and sealed in behalf of said Corporation by authority of its

Articles and said Nate R. Larson and _____

acknowledged said instrument to be the free act and deed of said Corporation.

Notarial Seal My Commission as Notary Public in Kanabec County Expires 1/31/25 Signature

LAURA K STRAND
NOTARY PUBLIC - MINNESOTA
MY COMMISSION EXPIRES 01/31/25

I hereby certify that a Final Examination has been made of the noted Contract, that the Contract has been completed, that the entire amount of Work Shown in this Final Voucher has been performed and the Total Value of the Work Performed in accordance with, the terms of the Contract is as shown in this Final Voucher.

This Contract is hereby accepted in accordance with the Specification 1516. Final acceptance of the Contract will be effective upon full Execution, by the Contractor and the Department, of the "Certificate of Final Acceptance" included with the Final Voucher.

Dated _____ Signature _____ District Engineer

Aitkin County Highway Department
1211 Air Park Drive
Aitkin, MN 56431

Contract No: 20222
Final Pay Request No. 7

## Aitkin County Highway Department
## Certificate of Final Acceptance
## Board Acknowledgment

Contract Number: 20222
Contractor: Redstone Construction, LLC
Date Certified: 12l/22/2023
Payment Number: 7

Whereas; Contract No. 20222 has in all things been completed, and the County Board being fully advised in the premises, now then be it resolved; that we do hereby accept said completed project for and in behalf of Aitkin County Highway Department and authorize final payment as specified herein.

State of

I, _____, agency_name within and for said county do hereby certify that the foregoing resolution is a true and correct copy of the resolution on file in my office.

Dated this _____ day of _____, 20___

At _____,

Signed By _____

Aitkin County Highway Department

(SEAL)

Aitkin County Highway Department
1211 Air Park Drive
Aitkin, MN 56431



| Contract Payment Summary | | | | |
|---|---|---|---|---|
| Payment Number | Up To Date | Work Certified Per Request | Amount Retained Per Request | Amount Paid Per Request |
| 1 | 2022-07-24 | $235,489.55 | $11,774.48 | $223,715.07 |
| 2 | 2022-08-14 | $218,793.75 | $10,939.69 | $207,854.06 |
| 3 | 2022-09-05 | $379,487.85 | $18,974.39 | $360,513.46 |
| 4 | 2022-09-25 | $43,508.75 | $2,175.44 | $41,333.31 |
| 5 | 2022-10-18 | $108,264.01 | $5,413.20 | $102,850.81 |
| 6 | 2023-08-21 | $600.00 | ($39,415.76) | $40,015.76 |
| 7 | 2023-12-22 | $0.00 | ($9,861.44) | $9,861.44 |

| Contract Funding Category Summary | | | | | | |
|---|---|---|---|---|---|---|
| Funding Category Name | Funding Category Number | Work Certified to Date | Less Amount Retained | Less Previous Payments | Amount Paid this Request | Total Amount Paid to Date |
| Approach Costs | | $123,246.76 | $0.00 | $122,014.29 | $1,232.47 | $123,246.76 |
| Structure Costs | | $862,897.15 | $0.00 | $854,268.18 | $8,628.97 | $862,897.15 |

| Contract Funding Source Summary | | | | | |
|---|---|---|---|---|---|
| Accounting Number | Funding Source Name | Amount Paid this Request | Revised Contract Amount | Funds Encumbered to Date | Paid Contractor to Date |
| 001 | Regular (CSAH) | $5,655.56 | $550,127.55 | $550,402.55 | $565,555.86 |
| 004 | State Transportation Bonds for Locals | $4,205.88 | $420,313.05 | $420,588.05 | $420,588.05 |

| Project Payment Summary | | | | | |
|---|---|---|---|---|---|
| Project | Payment Number | Up To Date | Work Certified Per Request | Amount Retained Per Request | Amount Paid Per Request |
| SAP 001-618-005 | 1 | 2022-07-24 | $235,489.55 | $11,774.48 | $223,715.07 |
| SAP 001-618-005 | 2 | 2022-08-14 | $218,793.75 | $10,939.69 | $207,854.06 |
| SAP 001-618-005 | 3 | 2022-09-05 | $379,487.85 | $18,974.39 | $360,513.46 |
| SAP 001-618-005 | 4 | 2022-09-25 | $43,508.75 | $2,175.44 | $41,333.31 |
| SAP 001-618-005 | 5 | 2022-10-18 | $108,264.01 | $5,413.20 | $102,850.81 |
| SAP 001-618-005 | 6 | 2023-08-21 | $600.00 | ($39,415.76) | $40,015.76 |
| SAP 001-618-005 | 7 | 2023-12-22 | $0.00 | ($9,861.44) | $9,861.44 |

| Project Funding Category Summary | | | | | | |
|---|---|---|---|---|---|---|
| Project | Funding Category Name | Work Certified to Date | Less Amount Retained | Less Previous Payments | Amount Paid this Request | Total Amount Paid to Date |
| SAP 001-618-005 | Approach Costs | $123,246.76 | $0.00 | $122,014.29 | $1,232.47 | $123,246.76 |
| SAP 001-618-005 | Structure Costs | $862,897.15 | $0.00 | $854,268.18 | $8,628.97 | $862,897.15 |

| Project Funding Source Summary | | | | | |
|---|---|---|---|---|---|
| Project | Funding Source Name | Amount Paid this Request | Revised Contract Amount | Funds Encumbered to Date | Paid Contractor to Date |
| SAP 001-618-005 | 001 | $5,655.56 | $550,127.55 | $550,402.55 | $565,555.86 |
| SAP 001-618-005 | 004 | $4,205.88 | $420,313.05 | $420,588.05 | $420,588.05 |

**Aitkin County Highway Department**
**1211 Air Park Drive**
**Aitkin, MN 56431**



**Contract Item Status**

| Project | Line | Item | Description | Units | Unit Price | Contract Quantity | Quantity This Request | Amount This Request | Quantity To Date | Amount To Date |
|---|---|---|---|---|---|---|---|---|---|---|
| SAP 001-618-005 | 1 | 2104.502 | SALVAGE SIGN | EACH | $25.00 | 7 | 0 | $0.00 | 7 | $175.00 |
| SAP 001-618-005 | 2 | 2104.503 | REMOVE PIPE CULVERTS | L F | $10.00 | 69 | 0 | $0.00 | 69 | $690.00 |
| SAP 001-618-005 | 3 | 2106.507 | EXCAVATION - COMMON (P) | C Y | $16.00 | 281 | 0 | $0.00 | 281 | $4,496.00 |
| SAP 001-618-005 | 4 | 2106.507 | COMMON EMBANKMENT (CV) (P) | C Y | $5.00 | 761 | 0 | $0.00 | 761 | $3,805.00 |
| SAP 001-618-005 | 5 | 2118.509 | AGGREGATE SURFACING CLASS 5 MOD | TON | $34.00 | 638 | 0 | $0.00 | 584.64 | $19,877.76 |
| SAP 001-618-005 | 6 | 2123.510 | 3.0 CU YD SHOVEL | HOUR | $180.00 | 8 | 0 | $0.00 | 2 | $360.00 |
| SAP 001-618-005 | 7 | 2123.510 | DOZER | HOUR | $170.00 | 8 | 0 | $0.00 | 1 | $170.00 |
| SAP 001-618-005 | 8 | 2442.501 | REMOVE EXISTING BRIDGE | LS | $58,000.00 | 1 | 0 | $0.00 | 1 | $58,000.00 |
| SAP 001-618-005 | 9 | 2501.502 | 18" GS PIPE APRON | EACH | $350.00 | 4 | 0 | $0.00 | 4 | $1,400.00 |
| SAP 001-618-005 | 10 | 2501.503 | 18" CS PIPE CULVERT | L F | $65.00 | 116 | 0 | $0.00 | 116 | $7,540.00 |
| SAP 001-618-005 | 11 | 2511.507 | RANDOM RIPRAP CLASS III | C Y | $110.00 | 14 | 0 | $0.00 | 13 | $1,430.00 |
| SAP 001-618-005 | 12 | 2573.501 | EROSION CONTROL SUPERVISOR | LS | $600.00 | 1 | 0 | $0.00 | 1 | $600.00 |
| SAP 001-618-005 | 13 | 2573.502 | CULVERT END CONTROLS | EACH | $175.00 | 2 | 0 | $0.00 | 2 | $350.00 |
| SAP 001-618-005 | 14 | 2573.503 | SILT FENCE, TYPE MS | L F | $2.50 | 1441 | 0 | $0.00 | 1436 | $3,590.00 |
| SAP 001-618-005 | 15 | 2573.503 | FLOTATION SILT CURTAIN TYPE MOVING WATER (3 FT DEPTH) | L F | $20.00 | 300 | 0 | $0.00 | 300 | $6,000.00 |
| SAP 001-618-005 | 16 | 2573.503 | SEDIMENT CONTROL LOG TYPE STRAW | L F | $5.00 | 400 | 0 | $0.00 | 490 | $2,450.00 |
| SAP 001-618-005 | 17 | 2575.501 | TURF ESTABLISHMENT | LS | $2,500.00 | 1 | 0 | $0.00 | 1 | $2,500.00 |
| SAP 001-618-005 | 18 | 2575.504 | EROSION CONTROL BLANKETS CATEGORY 3N | S Y | $3.00 | 2008 | 0 | $0.00 | 2571 | $7,713.00 |
| SAP 001-618-005 | 19 | 2575.523 | RAPID STABILIZATION METHOD 3 | MGAL | $300.00 | 22 | 0 | $0.00 | 7 | $2,100.00 |
| SAP 001-618-005 | 20 | 2021.501 | MOBILIZATION | LS | $90,700.00 | 1 | 0 | $0.00 | 1 | $90,700.00 |
| SAP 001-618-005 | 21 | 2401.503 | TYPE S (TL-4) BARRIER CONC (3S52) (P) | L F | $70.00 | 302 | 0 | $0.00 | 302 | $21,140.00 |

**Aitkin County Highway Department**
**1211 Air Park Drive**
**Aitkin, MN 56431**



**Contract Item Status**

| Project | Line | Item | Description | Units | Unit Price | Contract Quantity | Quantity This Request | Amount This Request | Quantity To Date | Amount To Date |
|---|---|---|---|---|---|---|---|---|---|---|
| SAP 001-618-005 | 22 | 2401.507 | STRUCTURAL CONCRETE (3B52) (P) | C Y | $1,100.00 | 83 | 0 | $0.00 | 83 | $91,300.00 |
| SAP 001-618-005 | 23 | 2401.508 | REINFORCEMENT BARS (EPOXY COATED) (P) | LB | $1.25 | 108330 | 0 | $0.00 | 108330 | $135,412.50 |
| SAP 001-618-005 | 24 | 2401.601 | STRUCTURE EXCAVATION | LS | $6,000.00 | 1 | 0 | $0.00 | 1 | $6,000.00 |
| SAP 001-618-005 | 25 | 2401.601 | SLOPE PREPARATION | LS | $10,000.00 | 1 | 0 | $0.00 | 1 | $10,000.00 |
| SAP 001-618-005 | 26 | 2401.618 | BRIDGE SLAB CONCRETE (3YHPC-M) (P) | S F | $48.00 | 5285 | 0 | $0.00 | 5285 | $253,680.00 |
| SAP 001-618-005 | 27 | 2402.502 | FLOOR DRAIN TYPE B702 MODIFIED | EACH | $500.00 | 4 | 0 | $0.00 | 4 | $2,000.00 |
| SAP 001-618-005 | 28 | 2402.508 | STRUCTURAL STEEL (3306) (P) | LB | $7.47 | 530 | 0 | $0.00 | 530 | $3,959.10 |
| SAP 001-618-005 | 29 | 2451.607 | STRUCTURAL BACKFILL (CV) (P) | C Y | $45.00 | 270 | 0 | $0.00 | 270 | $12,150.00 |
| SAP 001-618-005 | 30 | 2452.502 | C-I-P CONC TEST PILE 100 FT LONG 12" | EACH | $15,000.00 | 2 | 0 | $0.00 | 2 | $30,000.00 |
| SAP 001-618-005 | 31 | 2452.502 | C-I-P CONC TEST PILE 105 FT LONG 16" | EACH | $25,000.00 | 2 | 0 | $0.00 | 2 | $50,000.00 |
| SAP 001-618-005 | 32 | 2452.502 | PILE POINTS 12" | EACH | $300.00 | 8 | 0 | $0.00 | 8 | $2,400.00 |
| SAP 001-618-005 | 33 | 2452.502 | PILE POINTS 16" | EACH | $425.00 | 12 | 0 | $0.00 | 12 | $5,100.00 |
| SAP 001-618-005 | 34 | 2452.603 | C-I-P CONCRETE PILING 12" | L F | $38.00 | 540 | 0 | $0.00 | 613.1 | $23,297.80 |
| SAP 001-618-005 | 35 | 2452.603 | C-I-P CONCRETE PILING 16" | L F | $62.00 | 950 | 0 | $0.00 | 1325.5 | $82,181.00 |
| SAP 001-618-005 | 36 | 2502.501 | DRAINAGE SYSTEM TYPE (B910) | LS | $2,800.00 | 1 | 0 | $0.00 | 1 | $2,800.00 |
| SAP 001-618-005 | 37 | 2511.504 | GEOTEXTILE FILTER TYPE 7 | S Y | $3.75 | 660 | 0 | $0.00 | 597.4 | $2,240.25 |
| SAP 001-618-005 | 38 | 2511.507 | RANDOM RIPRAP CLASS III | C Y | $110.00 | 310 | 0 | $0.00 | 287 | $31,570.00 |
| SAP 001-618-005 | 39 | 2563.601 | TRAFFIC CONTROL | LS | $4,200.00 | 1 | 0 | $0.00 | 1 | $4,200.00 |
| SAP 001-618-005 | 40 | 2575.504 | TURF REINFORCEMENT MAT CATEGORY 3 | S Y | $16.50 | 263 | 0 | $0.00 | 201 | $3,316.50 |
| **Base Bid Totals:** | | | | | | | | **$0.00** | | **$986,693.91** |

**Aitkin County Highway Department**
**1211 Air Park Drive**
**Aitkin, MN 56431**



| Project Category Totals | | | |
|---|---|---|---|
| **Project** | **Category** | **Amount This Request** | **Amount To Date** |
| SAP 001-618-005 | Participating | $0.00 | $863,447.15 |
| SAP 001-618-005 | Non-Participating | $0.00 | $123,246.76 |

**Contract Change Item Status**

| Project | CC | Line | Item | Unit Price | Contract Quantity | Contract Amount | New Item or Adj to Existing | Quantity This Request | Amount This Request | Quantity To date | Amount To date |
|---|---|---|---|---|---|---|---|---|---|---|---|
| SAP 001-618-005 | CO1 | 41 | 2563.601 TRAFFIC CONTROL (LS) | $400.00 | 1 | $400.00 | ITM | 0 | $0.00 | 1 | $400.00 |
| SAP 001-618-005 | CO2 | 42 | 2461.607 CONCRETE STRENGTH FAILURE PENALTY (CU YD) | ($20.00) | 47.5 | ($950.00) | ITM | 0 | $0.00 | 47.5 | ($950.00) |
| **Contract Change Totals:** | | | | | | | | | **$0.00** | | **($550.00)** |

**Contract Change Totals**

| Number | Description | Effective Date | Amount |
|---|---|---|---|
| 1 | Prior to construction beginning, it was decided that advance notification signs should be installed to inform the traveling public of the date of the upcoming road closure. The contractor was directed to install a sign east of the CSAH 18 and CSAH 5 intersection and a sign west of the CSAH 18 and 270th Ave intersection.<br><br>The contractor agreed to provide the additional traffic control for the lump sum cost of $400.00. | 06/16/2022 | $400.00 |
| 2 | In accordance with Specifications 2461.3G.5.e and 2461.3G.5.f(4) and Table 2461-19, the contractor will be subject to a $20 per CY concrete failure monetary reduction for 47.5 CY of 1P62 pile fill placed on 8-8-22. Concrete test results for the first day of pile fill established a 3020 psi 28 day strength for the east abutment and pier 2. Test results for the final day of pile fill established a 2950 psi 28 day strength for the west abutment and pier 1. The moving average of the 2 lots is 2985 psi which results in the failure and $20 per CY monetary reduction. All test results and concrete tickets are in the inspection file for documentation.<br><br>The total monetary reduction associated with the failing pile fill is $950.00. | 10/21/2022 | ($950.00) |

**Material On Hand Additions**

| Line | Item | Description | Date | Added | Comments |
|---|---|---|---|---|---|
| | | | | | |

**Material On Hand Balance**

| Line | Item | Description | Date | Added | Used | Remaining |
|---|---|---|---|---|---|---|
| | | | | | | |

| | |
|---|---|
| **Contract Total** | **$986,143.91** |

# Board of County Commissioners Agenda Request

**2N**
Agenda Item #

**Requested Meeting Date:** 2-13-24

**Title of Item:** Final Contract Payment (#20227)

| | |
|---|---|
| ☐ REGULAR AGENDA<br>☑ CONSENT AGENDA<br>☐ INFORMATION ONLY | **Action Requested:**<br>☐ Approve/Deny Motion<br>☑ Adopt Resolution (attach draft)<br>☐ Direction Requested<br>☐ Discussion Item<br>☐ Hold Public Hearing*<br>**provide copy of hearing notice that was published* |
| **Submitted by:**<br>John Welle | **Department:**<br>Highway Department |
| **Presenter (Name and Title):**<br>NA | **Estimated Time Needed:**<br>NA |

**Summary of Issue:**

Authorization by the following resolution is requested to make final payment to Sir Lines-A-Lot, LLC - Edina, MN in the amount of $3,279.69 for Contract No. 20227, which included enhanced pavement markings on CH 12, and portions on CH 6 and CH 28.

The final contract amount of $327,969.37 is less than 0.1% above the bid amount of $327,841.04.

Resolution:
WHEREAS, Contract No. 20227 has in all been completed, and the County Board being fully advised in the premises.

NOW THEREFORE BE IT RESOLVED, That the Aitkin County Board of Commissioners does hereby accept said completed contract for and on behalf of the County of Aitkin and authorize final payment to Sir Lines-A-Lot, LLC in the amount of $3,279.69.

**Alternatives, Options, Effects on Others/Comments:**

**Recommended Action/Motion:**
Approve resolution

**Financial Impact:**
*Is there a cost associated with this request?* ☑ *Yes* ☐ *No*
*What is the total cost, with tax and shipping?* $ 3,279.69
*Is this budgeted?* ☑ *Yes* ☐ *No* *Please Explain:*

Legally binding agreements must have County Attorney approval prior to submission.

**CERTIFIED COPY OF RESOLUTION OF COUNTY BOARD OF AITKIN COUNTY, MINNESOTA**

ADOPTED February 13, 2024

By Commissioner: xxx **20240213-xxx**

## Final Contract Payment (#20227)

**WHEREAS,** Contract No. 20227 has in all been completed, and the County Board being fully advised in the premises.

**NOW THEREFORE BE IT RESOLVED,** That the Aitkin County Board of Commissioners does hereby accept said completed contract for and on behalf of the County of Aitkin and authorize final payment to Sir Lines-A-Lot, LLC in the amount of $3,279.69.

Commissioner xxx seconded the adoption of the resolution and it was declared adopted upon the following vote

xxx MEMBERS PRESENT All Members Voting xxx

**STATE OF MINNESOTA}**
**COUNTY OF AITKIN}**

I, Jessica Seibert, County Administrator, Aitkin County, Minnesota do hereby certify that I have compared the foregoing with the original resolution filed in the Administration Office of Aitkin County in Aitkin, Minnesota as stated in the minutes of the proceedings of said Board on the 13th day of February 2024, and that the same is a true and correct copy of the whole thereof.

**Witness my hand and seal this 13th day of February 2024**

Jessica Seibert
County Administrator

**Aitkin County Highway Department**
**1211 Air Park Drive**
**Aitkin, MN 56431**



**Contract Number:** 20227
**Final Pay Request Number:** 4

| Project Number | Project Description |
|---|---|
| SP 001-070-007 | Enhanced Pavement Markings on Various County Roads |

| | | | |
|---|---|---|---|
| **Contractor:** | Sir Lines-A-Lot, LLC<br>7175 Cahill Road<br>Edina, MN 55439 | **Vendor Number:**<br>**Up To Date:**<br>**Warrant #** _____ **Date** _____ | 13604<br>12/23/2023 |

| **Contract Amount** | | **Funds Encumbered** | |
|---|---|---|---|
| Original Contract | $327,841.04 | Original | $327,841.04 |
| Contract Changes | $0.00 | Additional | N/A |
| Revised Contract | $327,841.04 | Total | $327,841.04 |

| **Work Certified To Date** | |
|---|---|
| Base Bid Items | $327,969.37 |
| Contract Changes | $0.00 |
| Material On Hand | $0.00 |
| Total | $327,969.37 |

| Project | Work Certified This Request | Work Certified To Date | Less Amount Retained | Less Previous Payments | Amount Paid This Request | Total Amount Paid To Date |
|---|---|---|---|---|---|---|
| SP 001-070-007 | $0.00 | $327,969.37 | $0.00 | $324,689.68 | $3,279.69 | $327,969.37 |

| Work Certified This Request | Work Certified To Date | Less Amount Retained | Less Previous Payments | Amount Paid This Request | Total Amount Paid To Date |
|---|---|---|---|---|---|
| $0.00 | $327,969.37 | $0.00 | $324,689.68 | $3,279.69 | $327,969.37 |
| | Percent: Retained: 0% | | Percent Complete: 100.04 % | | |
| | | | | **Amount Paid this Final Pay Request: $3,279.69** | |

I hereby certify that a Final Examination has been made of the noted Contract, that the Contract has been completed, that the entire amount of Work Shown in this Final Voucher has been performed and the Total Value of the Work Performed in accordance with, and pursuant to, the terms of the Contract is as shown in this Final Voucher.

John Welle — 12-26-23 (Date)
John Welle – P.E. No. 24340
Aitkin County Highway Engineer

_____ — _____ (Date)
Kirk Peysar
Aitkin County Auditor

_____ — 1/5/2024 (Date)
Sir Lines-A-Lot, LLC
Chaise VanOverbeke, President

3-307-6262
Account Number

**Aitkin County Highway Department**
**1211 Air Park Drive**
**Aitkin, MN 56431**



Project No. : SP 001-070-007
Final Pay Request No. : 4
Contract No.: 20227

**Certificate of Final Contract Acceptance**
**Final Voucher Number: 4**

This is to certify that to the best of my knowledge, the items of work shown in the Statement of Work Certified herein have actually furnished in accordance with the Plans and Specifications. This Project has been completed in accordance with the Laws, Standards and Procedures of as they apply to projects in this category, and if applicable, approved by the Federal Highway Administration.

Dated 12-26-23 Signature John Welle County/City/Project Engineer

The undersigned Contractor hereby certifies that the work described has been performed in accordance with the terms of the Contract, and agrees that the Final Value of Work Certified on this Contract is $327,969.37 and agrees to the amount of $3,279.69 as Final Payment on this Contract in accordance with this Final Voucher.

Contractor: Sir Lines-A-Lot, LLC By Chaise VanOverbeke, President

And _____ And _____ State of ,

On This 5 Day January, 2024, Before me appeared Chaise VanOverbeke To me known to

(Individual Acknowledgment)

be the person who executed the foregoing Acceptance and Acknowledged that he/she executed the same as _____ free to act and deed

(Corporate Acknowledgment)

Chaise VanOverbeke And _____, to me personally known, who, being each by me duly sworn

each did say that they are respectively the President and _____ of the Sir Lines-A-Lot Corporation named in the foregoing instrument, and that the seal affixed to said instrument is the Corporate Seal of said Corporation, and the said instrument was signed and sealed in behalf of said Corporation by authority of its

_____ and said _____ and _____

acknowledged said instrument to be the free act and deed of said Corporation.

Notarial Seal My Commission as Notary Public in Hennepin County Expires 1/31/2026 Signature Tabitha Rackley

TABITHA RACKLEY
Notary Public
State of Minnesota
My commission expires
1/31/2026

I hereby certify that a Final Examination has been made of the noted Contract, that the Contract has been completed, that the entire amount of Work Shown in this Final Voucher has been performed and the Total Value of the Work Performed in accordance with, the terms of the Contract is as shown in this Final Voucher.

This Contract is hereby accepted in accordance with the Specification 1516. Final acceptance of the Contract will be effective upon full Execution, by the Contractor and the Department, of the "Certificate of Final Acceptance" included with the Final Voucher.

Dated _____ Signature _____ District Engineer

Aitkin County Highway Department
1211 Air Park Drive
Aitkin, MN 56431

Contract No: 20227
Final Pay Request No. 4

## Aitkin County Highway Department
## Certificate of Final Acceptance
## Board Acknowledgment

Contract Number: 20227
Contractor: Sir Lines-A-Lot, LLC
Date Certified: 12l/23/2023
Payment Number: 4

Whereas; Contract No. 20227 has in all things been completed, and the County Board being fully advised in the premises, now then be it resolved; that we do hereby accept said completed project for and in behalf of Aitkin County Highway Department and authorize final payment as specified herein.

State of

I, _____, Aitkin County Auditor, within and for said county do hereby certify that the foregoing resolution is a true and correct copy of the resolution on file in my office.

Dated this _____ day of _____, 20___

At _____,

Signed By _____

Aitkin County Highway Department

(SEAL)

Aitkin County Highway Department
1211 Air Park Drive
Aitkin, MN 56431



| Contract Payment Summary | | | | |
|---|---|---|---|---|
| Payment Number | Up To Date | Work Certified Per Request | Amount Retained Per Request | Amount Paid Per Request |
| 1 | 2022-09-06 | $309,226.70 | $15,461.34 | $293,765.36 |
| 2 | 2023-06-01 | $16,304.80 | $815.24 | $15,489.56 |
| 3 | 2023-08-09 | $2,437.87 | ($12,996.89) | $15,434.76 |
| 4 | 2023-12-23 | $0.00 | ($3,279.69) | $3,279.69 |

| Contract Funding Category Summary | | | | | | |
|---|---|---|---|---|---|---|
| Funding Category Name | Funding Category Number | Work Certified to Date | Less Amount Retained | Less Previous Payments | Amount Paid this Request | Total Amount Paid to Date |
| Participating | | $327,969.37 | $0.00 | $324,689.68 | $3,279.69 | $327,969.37 |

| Contract Funding Source Summary | | | | | |
|---|---|---|---|---|---|
| Accounting Number | Funding Source Name | Amount Paid this Request | Revised Contract Amount | Funds Encumbered to Date | Paid Contractor to Date |
| 001 | Regular (CSAH) | $329.12 | $32,784.10 | $32,784.10 | $32,912.43 |
| 006 | Federal | $2,950.57 | $295,056.94 | $295,056.94 | $295,056.94 |

| Project Payment Summary | | | | | |
|---|---|---|---|---|---|
| Project | Payment Number | Up To Date | Work Certified Per Request | Amount Retained Per Request | Amount Paid Per Request |
| SP 001-070-007 | 1 | 2022-09-06 | $309,226.70 | $15,461.34 | $293,765.36 |
| SP 001-070-007 | 2 | 2023-06-01 | $16,304.80 | $815.24 | $15,489.56 |
| SP 001-070-007 | 3 | 2023-08-09 | $2,437.87 | ($12,996.89) | $15,434.76 |
| SP 001-070-007 | 4 | 2023-12-23 | $0.00 | ($3,279.69) | $3,279.69 |

| Project Funding Category Summary | | | | | | |
|---|---|---|---|---|---|---|
| Project | Funding Category Name | Work Certified to Date | Less Amount Retained | Less Previous Payments | Amount Paid this Request | Total Amount Paid to Date |
| SP 001-070-007 | Participating | $327,969.37 | $0.00 | $324,689.68 | $3,279.69 | $327,969.37 |

| Project Funding Source Summary | | | | | |
|---|---|---|---|---|---|
| Project | Funding Source Name | Amount Paid this Request | Revised Contract Amount | Funds Encumbered to Date | Paid Contractor to Date |
| SP 001-070-007 | 001 | $329.12 | $32,784.10 | $32,784.10 | $32,912.43 |
| SP 001-070-007 | 006 | $2,950.57 | $295,056.94 | $295,056.94 | $295,056.94 |

**Aitkin County Highway Department**
**1211 Air Park Drive**
**Aitkin, MN 56431**



**Contract Item Status**

| Project | Line | Item | Description | Units | Unit Price | Contract Quantity | Quantity This Request | Amount This Request | Quantity To Date | Amount To Date |
|---|---|---|---|---|---|---|---|---|---|---|
| SP 001-070-007 | 1 | 2021.501 | MOBILIZATION | LS | $1,800.00 | 1 | 0 | $0.00 | 1 | $1,800.00 |
| SP 001-070-007 | 2 | 2563.601 | TRAFFIC CONTROL | LS | $1,800.00 | 1 | 0 | $0.00 | 1 | $1,800.00 |
| SP 001-070-007 | 3 | 2582.503 | 6" SOLID LINE MULTI-COMPONENT | L F | $0.35 | 158990 | 0 | $0.00 | 158721 | $55,552.35 |
| SP 001-070-007 | 4 | 2582.503 | 6" BROKEN LINE MULTI-COMPONENT | L F | $0.35 | 27590 | 0 | $0.00 | 27190 | $9,516.50 |
| SP 001-070-007 | 5 | 2582.503 | 6" SOLID LINE MULTI-COMPONENT GROUND IN (WR) | L F | $0.68 | 380403 | 0 | $0.00 | 380949 | $259,045.32 |
| SP 001-070-007 | 6 | 2582.503 | 8" DOTTED LINE MULTI-COMPONENT GROUND IN (WR) | L F | $4.00 | 66 | 0 | $0.00 | 63.8 | $255.20 |
| **Base Bid Totals:** | | | | | | | | **$0.00** | | **$327,969.37** |

**Project Category Totals**

| Project | Category | Amount This Request | Amount To Date |
|---|---|---|---|
| SP 001-070-007 | | $0.00 | $327,969.37 |

**Contract Change Item Status**

| Project | CC | Line | Item | Unit Price | Contract Quantity | Contract Amount | New Item or Adj to Existing | Quantity This Request | Amount This Request | Quantity To date | Amount To date |
|---|---|---|---|---|---|---|---|---|---|---|---|
| | | | | | | | | | | | |
| **Contract Change Totals:** | | | | | | | | | **$0.00** | | **$0.00** |

**Contract Change Totals**

| Number | Description | Effective Date | Amount |
|---|---|---|---|
| | | | |

**Material On Hand Additions**

| Line | Item | Description | Date | Added | Comments |
|---|---|---|---|---|---|
| | | | | | |

**Material On Hand Balance**

| Line | Item | Description | Date | Added | Used | Remaining |
|---|---|---|---|---|---|---|
| | | | | | | |

| Contract Total | $327,969.37 |
|---|---|

# Board of County Commissioners Agenda Request

**20**
Agenda Item #

**Requested Meeting Date:** 2-13-24

**Title of Item:** Grant Agreement No. 1054971 (SAP 001-599-043)

| | |
|---|---|
| ☐ REGULAR AGENDA<br>☑ CONSENT AGENDA<br>☐ INFORMATION ONLY | **Action Requested:**<br>☐ Approve/Deny Motion<br>☑ Adopt Resolution (attach draft)<br>☐ Direction Requested<br>☐ Discussion Item<br>☐ Hold Public Hearing*<br>**provide copy of hearing notice that was published* |

| | |
|---|---|
| **Submitted by:**<br>John Welle | **Department:**<br>Highway Department |
| **Presenter (Name and Title):**<br>NA | **Estimated Time Needed:**<br>NA |

**Summary of Issue:**

SAP 001-599-043 is a bridge replacement project on 210th Lane (Pliny Township Road) over the Snake River that was awarded on 12-19-23 for a cost of $552,663.35.

Funding for this project, including $65,000 of engineering costs, is as follows:
Town Bridge Funds: $282,184.34
Local Bridge Replacement Program (LBRP) Grant: $325,479.01
Pliny Township: $10,000.00

MnDOT Agreement No. 1054971 has been provided for the purpose of providing the LBRP grant. The County Attorney within the past year has reviewed the same grant agreement language for other projects and has approved the agreement as to form and content.

Authorization by the attached resolution is requested to enter into Agreement No. 1054971.

**Alternatives, Options, Effects on Others/Comments:**

**Recommended Action/Motion:**
Approve resolution

**Financial Impact:**
*Is there a cost associated with this request?* ☐ *Yes* ☑ *No*
*What is the total cost, with tax and shipping? $*
*Is this budgeted?* ☐ *Yes* ☐ *No* *Please Explain:*

Legally binding agreements must have County Attorney approval prior to submission.

**CERTIFIED COPY OF RESOLUTION OF COUNTY BOARD OF AITKIN COUNTY, MINNESOTA**

ADOPTED February 13, 2024

By Commissioner: xxx **20240213-xxx**

**Grant Agreement No. 1054971 (SAP 001-599-043)**

**WHEREAS,** Aitkin County has applied to the Commissioner of Transportation for a grant from the Minnesota State Transportation Fund related to Bridge No.01537; and

**WHEREAS**, the Commissioner of Transportation has given notice that funding for this project is available; and

**WHEREAS**, the amount of the grant has been determined to be $325,479.01 by reason of the lowest responsible bid;

**NOW THEREFORE,** be it resolved that Aitkin County does hereby agree to the terms and conditions of the grant consistent with Minnesota Statutes, section 174.50, and will pay any additional amount by which the cost exceeds the estimate, and will return to the Minnesota State Transportation Fund any amount appropriated for the project but not required. The proper county officers are authorized to execute a grant agreement and any amendments thereto with the Commissioner of Transportation concerning the above-referenced grant.

Commissioner xxx seconded the adoption of the resolution and it was declared adopted upon the following vote

xxx MEMBERS PRESENT All Members Voting xxx

**STATE OF MINNESOTA}**
**COUNTY OF AITKIN}**

I, Jessica Seibert, County Administrator, Aitkin County, Minnesota do hereby certify that I have compared the foregoing with the original resolution filed in the Administration Office of Aitkin County in Aitkin, Minnesota as stated in the minutes of the proceedings of said Board on the 13th day of February 2024, and that the same is a true and correct copy of the whole thereof.

**Witness my hand and seal this 13th day of February 2024**

Jessica Seibert
County Administrator

DEPARTMENT OF TRANSPORTATION

MnDOT Agreement No. _1054971
SP or SAP No. _SAP 001-599-043

# STATE OF MINNESOTA
# LOCAL BRIDGE REPLACEMENT PROGRAM
# GRANT AGREEMENT

This agreement is between the State of Minnesota, acting through its Commissioner of Transportation ("State"), and ("Grantee"):

Public Entity (Grantee) name, address and contact person:
___Aitkin County Highway Department____
___1211 Air Park Drive_____
___Aitkin, MN 56431_____
_____
Contact: __John Welle – 218-927-7469_____

## RECITALS

1. Minnesota Statutes § 174.50, subd. 6-7 authorize the State to enter into this agreement.
2. General Funds were appropriated for the Local Bridge Replacement Program in Minnesota Laws 2023, Chapter 68-H.F. 2887.
3. Grantee has been awarded Local Bridge Replacement Program (LBRP) funds under Minn. Stat. § 174.50, subd. 6-7.
4. Grantee represents that it is duly qualified and agrees to perform all services described in this agreement to the satisfaction of the State. Pursuant to Minn.Stat.§16B.98, Subd.1, Grantee agrees to minimize administrative costs as a condition of this agreement.

## AGREEMENT TERMS

1 **Term of Agreement, Survival of Terms, and Incorporation of Exhibits**

1.1 **Effective Date.** This agreement will be effective on the date the State obtains all required signatures under Minn. Stat.§16B.98, Subd. 5. As required by Minn.Stat.§16B.98 Subd. 7, no payments will be made to Grantee until this agreement is fully executed. Grantee must not begin work under this agreement until this agreement is fully executed and Grantee has been notified by the State's Authorized Representative to begin the work.

1.2 **Expiration Date.** This agreement will expire on December 31, 2027 or when all obligations have been satisfactorily fulfilled, whichever occurs first.

1.3 **Survival of Terms.** All clauses which impose obligations continuing in their nature and which must survive in order to give effect to their meaning will survive the expiration or termination of this agreement, including, without limitation, the following clauses: 8. Liability; 9. State Audits; 10. Government Data Practices and Intellectual Property; 11. Workers Compensation; 12. Governing Law, Jurisdiction, and Venue; and 14. Data Disclosure.

1.4 **Exhibits.** Exhibit A: Sources and Uses of Funds Schedule; Exhibit B: Grant Application; and Exhibit C: Grantee Resolution Approving Grant Agreement are attached and incorporated into this agreement.

2 **Grantee's Duties**

2.1 Grantee will conduct one or more of the following activities in accordance with its grant application, or in the case of legislatively selected projects, in accordance with the enabling session law, which is attached to this Agreement as Exhibit B: (i) constructing or reconstructing a bridge, (ii) abandoning an existing bridge that is deficient and in need of replacement, but where no replacement will be made, or (iii) constructing a road to facilitate the abandonment or removal of an existing bridge determined to be deficient.

2.2 Grantee will comply with all required grants management policies and procedures set forth through Minn.Stat.§16B.97, Subd. 4 (a) (1).

2.3 **Asset Monitoring.** If Grantee uses funds obtained by this agreement to acquire a capital asset, the Grantee is required to use that asset for a public purpose for the normal useful life of the asset. Grantee may not sell or change the purpose of use for the capital asset(s) obtained with grant funds under this agreement without the prior written consent of the State and an agreement executed and approved by the same parties who executed and approved this agreement, or their successors in office.

## 3 Time

3.1 Grantee must comply with all the time requirements described in this agreement. In the performance of this grant agreement, time is of the essence.

## 4 Consideration and Payment

4.1 **Consideration.** The State will pay for all services performed by Grantee under this agreement as follows:

4.1.1 **Compensation.** Grantee will be reimbursed for actual, incurred costs that are eligible under Minn. Stat. § 174.50, subd 6-7. Grantee shall use this grant solely to reimburse itself for expenditures it has already made to pay for the costs of one or more of the activities listed under section 2.1.

4.1.2 **Sources and Uses of Funds.** Grantee represents to State that the Sources and Uses of Funds Schedule attached as Exhibit A accurately shows the total cost of the project and all of the funds that are available for the completion of the project. Grantee agrees that it will pay for any costs that are ineligible for reimbursement and for any amount by which the costs exceed State's total obligation in section 4.1.3. Grantee will return to State any amount appropriated but not required.

4.1.3 **Total Obligation.** The total obligation of the State for all compensation and reimbursements to Grantee under this agreement will not exceed $325,479.01.

4.2 **Payment**

4.2.1 **Invoices.** Grantee will submit state aid pay requests for reimbursements requested under this grant agreement. The State will promptly pay Grantee after Grantee presents an itemized invoice for the services actually performed and the State's Authorized Representative accepts the invoiced services.

4.2.2 **All Invoices Subject to Audit.** All invoices are subject to audit, at State's discretion.

4.2.3 **State's Payment Requirements**. State will promptly pay all valid obligations under this agreement as required by Minnesota Statutes §16A.124. State will make undisputed payments no later than 30 days after receiving Grantee's invoices and progress reports for services performed. If an invoice is incorrect, defective or otherwise improper, State will notify Grantee within ten days of discovering the error. After State receives the corrected invoice, State will pay Grantee within 30 days of receipt of such invoice.

4.2.4 **Grant Monitoring Visit and Financial Reconciliation.** During the period of performance, the State will make at least annual monitoring visits and conduct annual financial reconciliations of Grantee's expenditures.

4.2.4.1 The State's Authorized Representative will notify Grantee's Authorized Representative where and when any monitoring visit and financial reconciliation will take place, which State employees and/or contractors will participate, and which Grantee staff members should be present. Grantee will be provided with at least seven calendar days of notice prior to any monitoring visit or financial reconciliation.

4.2.4.2 Following a monitoring visit or financial reconciliation, Grantee will take timely and appropriate action on all deficiencies identified by State.

4.2.4.3 At least one monitoring visit and one financial reconciliation must be completed prior to final payment being made to Grantee.

4.2.5 **Unexpended Funds.** The Grantee must promptly return to the State at grant closeout any unexpended funds that have not been accounted for in a financial report submitted to the State.

4.2.6 **Closeout.** The State will determine, at its sole discretion, whether a closeout audit is required prior to final payment approval. If a closeout audit is required, final payment will be held until the audit has been completed. Monitoring of any capital assets acquired with grant funds will continue following grant closeout.

4.3 **Contracting and Bidding Requirements.** If Grantee is a municipality as defined by Minn. Stat. § 471.345, subdivision 1, then Grantee shall comply with the requirements of Minn. Stat. § 471.345 for all procurement under this Agreement.

## 5 Conditions of Payment

All services provided by Grantee under this agreement must be performed to the State's satisfaction, as determined at the sole discretion of the State's Authorized Representative and in accordance with all applicable federal, state, and local laws, ordinances, rules, and regulations. The Grantee will not receive payment for work found by the State to be unsatisfactory or performed in violation of federal, state, or local law.

## 6 Authorized Representatives

6.1 The State's Authorized Representative is:

Marc Briese,
Programs Engineer,
MnDOT State Aid Office
395 John Ireland Boulevard, MS 500
St. Paul, MN 55155
Office: 651-366-3802
marc.briese@state.mn.us

or his/her successor. State's Authorized Representative has the responsibility to monitor Grantee's performance and the authority to accept the services provided under this agreement. If the services are satisfactory, the State's Authorized Representative will certify acceptance on each invoice submitted for payment.

6.2 Grantee's Authorized Representative is:

Aitkin County Highway Department
John Welle (or successor)
Aitkin County Engineer
1211 Air Park Drive
Aitkin, MN 56431
Phone: 218-927-7469
jwelle@co.aitkin.mn.us

If Grantee's Authorized Representative changes at any time during this agreement, Grantee will immediately notify the State.

## 7 Assignment Amendments, Waiver, and Grant Agreement Complete

7.1 **Assignment.** The Grantee may neither assign nor transfer any rights or obligations under this agreement without the prior written consent of the State and a fully executed Assignment Agreement, executed and approved by the same parties who executed and approved this agreement, or their successors in office.

7.2 **Amendments.** Any amendments to this agreement must be in writing and will not be effective until it has been executed and approved by the same parties who executed and approved the original agreement, or their successors in office.

7.3 **Waiver.** If the State fails to enforce any provision of this agreement, that failure does not waive the provision or the State's right to subsequently enforce it.

7.4 **Grant Agreement Complete.** This grant agreement contains all negotiations and agreements between the State and Grantee. No other understanding regarding this agreement, whether written or oral, may be used to bind either party.

7.5 **Electronic Records and Signatures.** The parties agree to contract by electronic means. This includes using electronic signatures and converting original documents to electronic records.

7.6 **Certification.** By signing this Agreement, the Grantee certifies that it is not suspended or debarred from receiving federal or state awards.

## 8 Liability

Grantee and State agree that each will be responsible for its own acts and the results thereof to the extent authorized by law, and neither shall be responsible for the acts of the other party and the results thereof. The liability of State is governed by the provisions of Minn. Stat. Sec. 3.736. If Grantee is a "municipality" as that term is used in Minn. Stat. Chapter 466, then the liability of Grantee is governed by the provisions of Chapter 466. Grantee's liability hereunder shall not be limited to the extent of insurance carried by or provided by Grantee, or subject to any exclusion from coverage in any insurance policy.

## 9 State Audits

Under Minn. Stat. § 16B.98, Subd.8, the Grantee's books, records, documents, and accounting procedures and practices

of Grantee, or other party relevant to this grant agreement or transaction, are subject to examination by the State and/or the State Auditor or Legislative Auditor, as appropriate, for a minimum of six years from the end of this agreement, receipt and approval of all final reports, or the required period of time to satisfy all state and program retention requirements, whichever is later. Grantee will take timely and appropriate action on all deficiencies identified by an audit.

10 **Government Date Practices and Intellectual Property Rights**

10.1 **Government Data Practices.** Grantee and State must comply with the Minnesota Government Data Practices Act, Minn. Stat. Ch. 13, as it applies to all data provided by the State under this grant agreement, and as it applies to all data created, collected, received, stored, used, maintained, or disseminated by the Grantee under this agreement. The civil remedies of Minn. Stat. §13.08 apply to the release of the data referred to in this clause by either Grantee or the State.

11 **Workers Compensation**

The Grantee certifies that it is in compliance with Minn. Stat. §176.181, Subd. 2, pertaining to workers' compensation insurance coverage. The Grantee's employees and agents will not be considered State employees. Any claims that may arise under the Minnesota Workers' Compensation Act on behalf of these employees and any claims made by any third party as a consequence of any act or omission on the part of these employees are in no way the State's obligation or responsibility.

12 **Governing Law, Jurisdiction, and Venue**

Minnesota law, without regard to its choice-of-law provisions, governs this agreement. Venue for all legal proceedings out of this agreement, or its breach, must be in the appropriate state or federal court with competent jurisdiction in Ramsey County, Minnesota.

13 **Termination; Suspension**

13.1 **Termination by the State.** The State may terminate this agreement with or without cause, upon 30 days written notice to the Grantee. Upon termination, the Grantee will be entitled to payment, determined on a pro rata basis, for services satisfactorily performed.

13.2 **Termination for Cause.** The State may immediately terminate this grant agreement if the State finds that there has been a failure to comply with the provisions of this agreement, that reasonable progress has not been made, that fraudulent or wasteful activity has occurred, that Grantee has been convicted of a criminal offense relating to a state grant agreement, or that the purposes for which the funds were granted have not been or will not be fulfilled. The State may take action to protect the interests of the State of Minnesota, including the refusal to disburse additional funds and requiring the return of all or part of the funds already disbursed.

13.3 **Termination for Insufficient Funding.** The State may immediately terminate this agreement if:

13.3.1 It does not obtain funding from the Minnesota Legislature; or

13.3.2 If funding cannot be continued at a level sufficient to allow for the payment of the services covered here. Termination must be by written or fax notice to the Grantee. The State is not obligated to pay for any services that are provided after notice and effective date of termination. However, the Grantee will be entitled to payment, determined on a pro rata basis, for services satisfactorily performed to the extent that funds are available. The State will not be assessed any penalty if the agreement is terminated because of the decision of the Minnesota Legislature, or other funding source, not to appropriate funds. The State will provide the Grantee notice of the lack of funding within a reasonable time of the State's receiving that notice.

13.4 **Suspension.** The State may immediately suspend this agreement in the event of a total or partial government shutdown due to the failure to have an approved budget by the legal deadline. Work performed by the Grantee during a period of suspension will be deemed unauthorized and undertaken at risk of non-payment.

14 **Data Disclosure**

Under Minn. Stat. § 270C.65, Subd. 3, and other applicable law, Grantee consents to disclosure of its social security number, federal employer tax identification number, and/or Minnesota tax identification number, already provided to the State, to federal and state tax agencies and state personnel involved in the payment of state obligations. These identification numbers may be used in the enforcement of federal and state tax laws which could result in action

requiring the Grantee to file state tax returns and pay delinquent state tax liabilities, if any.

15 **Fund Use Prohibited.** The Grantee will not utilize any funds received pursuant to this Agreement to compensate, either directly or indirectly, any contractor, corporation, partnership, or business, however organized, which is disqualified or debarred from entering into or receiving a State contract. This restriction applies regardless of whether the disqualified or debarred party acts in the capacity of a general contractor, a subcontractor, or as an equipment or material supplier. This restriction does not prevent the Grantee from utilizing these funds to pay any party who might be disqualified or debarred after the Grantee's contract award on this Project.

16 **Discrimination Prohibited by Minnesota Statutes §181.59.** Grantee will comply with the provisions of Minnesota Statutes §181.59 which requires that every contract for or on behalf of the State of Minnesota, or any county, city, town, township, school, school district or any other district in the state, for materials, supplies or construction will contain provisions by which Contractor agrees: 1) That, in the hiring of common or skilled labor for the performance of any work under any contract, or any subcontract, no Contractor, material supplier or vendor, will, by reason of race, creed or color, discriminate against the person or persons who are citizens of the United States or resident aliens who are qualified and available to perform the work to which the employment relates; 2) That no Contractor, material supplier, or vendor, will, in any manner, discriminate against, or intimidate, or prevent the employment of any person or persons identified in clause 1 of this section, or on being hired, prevent or conspire to prevent, the person or persons from the performance of work under any contract on account of race, creed or color; 3) That a violation of this section is a misdemeanor; and 4) That this contract may be canceled or terminated by the state of Minnesota, or any county, city, town, township, school, school district or any other person authorized to grant contracts for employment, and all money due, or to become due under the contract, may be forfeited for a second or any subsequent violation of the terms or conditions of this Agreement.

17 **Limitation.** Under this Agreement, the State is only responsible for receiving and disbursing funds. Nothing in this Agreement will be construed to make the State a principal, co-principal, partner, or joint venturer with respect to the Project(s) covered herein. The State may provide technical advice and assistance as requested by the Grantee, however, the Grantee will remain responsible for providing direction to its contractors and consultants and for administering its contracts with such entities. The Grantee's consultants and contractors are not intended to be third party beneficiaries of this Agreement.

18 **Additional Provisions**

18.1 **Prevailing Wages.** Grantee agrees to comply with all of the applicable provisions contained in Minnesota Statutes Chapter 177, and specifically those provisions contained in Minn. Stat.§. 177.41 through 177.435 as they may be amended or replaced from time to time with respect to the project. By agreeing to this provision, Grantee is not acknowledging or agreeing that the cited provisions apply to the project.

18.2 **E-Verification.** Grantee agrees and acknowledges that it is aware of Minn.Stat. § 16C.075 regarding e-verification of employment of all newly hired employees to confirm that such employees are legally entitled to work in the United States, and that it will, if and when applicable, fully comply with such order.

18.3 **Telecommunications Certification.** If federal funds are included in Exhibit A, by signing this agreement Grantee certifies that, consistent with Section 889 of the John S. McCain National Defense Authorization Act for Fiscal Year 2019, Pub. L. 115-232 (Aug. 13, 2018), Grantee does not and will not use any equipment, system, or service that uses "covered telecommunications equipment or services" (as that term is defined in Section 889 of the Act) as a substantial or essential component of any system or as critical technology as part of any system. Grantee will include this certification as a flow down clause in any contract related to this agreement.

18.4 **Title VI/Non-discrimination Assurances.** Grantee agrees to comply with all applicable US DOT Standard Title VI/Non-Discrimination Assurances contained in DOT Order No. 1050.2A, and in particular Appendices A and E, which can be found at: https://edocs-public.dot.state.mn.us/edocs_public/DMResultSet/download?docId=11149035. If federal funds are included in Exhibit A, Grantee will ensure the appendices and solicitation language within the assurances are

inserted into contracts as required. State may conduct a review of the Grantee's compliance with this provision. The Grantee must cooperate with State throughout the review process by supplying all requested information and documentation to State, making Grantee staff and officials available for meetings as requested, and correcting any areas of non-compliance as determined by State.

18.5 **Use, Maintenance, Repair and Alterations**. The Grantee shall not, without the written consent of the State and the Commissioner, (i) permit or allow the use of any of the property improved with these grants funds (the Real Property) for any purpose other than in conjunction with or for the operation of a county highway, county state-aid highway, town road, or city street or for other uses customarily associated therewith, such as trails and utility corridors, (ii) substantially alter any of the Real Property except such alterations as may be required by laws, ordinances or regulations, or such other alterations as may improve the Real Property by increasing its value or which improve its ability to be used for the purposes set forth in section (i), (iii) take any action which would unduly impair or depreciate the value of the Real Property, (iv) abandon the Real Property, or (v) commit or permit any act to be done in or on the Real Property in violation of any law, ordinance or regulation.

If the Grantee fails to maintain the Real Property in accordance with this Section, the State may perform whatever acts and expend whatever funds necessary to so maintain the Real Property, and the Grantee irrevocably authorizes the State to enter upon the Real Property to perform such acts as may be necessary to so maintain the Real Property. Any actions taken or funds expended by the State shall be at its sole discretion, and nothing contained herein shall require the State to take any action or incur any expense and the State shall not be responsible, or liable to the Grantee or any other entity, for any such acts that are performed in good faith and not in a negligent manner. Any funds expended by the State pursuant to this Section shall be due and payable on demand by the State and will bear interest from the date of payment by the State at a rate equal to the lesser of the maximum interest rate allowed by law or 18% per year based upon a 365-day year.

**[The remainder of this page has intentionally been left blank.]**

**GRANTEE**
*The Grantee certifies that the appropriate person(s) have executed the grant agreement on behalf of the Grantee as required by applicable articles, bylaws, resolutions, or ordinances.*

By:_____

Title:_____

Date:_____

By:_____

Title:_____

Date:_____

By:_____

Title:_____

Date:_____

**DEPARTMENT OF TRANSPORTATION**
*Approval and Certifying Encumbrance*

By:_____
(with delegated authority)

Title: State Aid Programs Manager

Date:_____

**DEPARTMENT OF TRANSPORTATION**
**CONTRACT MANAGEMENT**

By:_____

Date:_____

# EXHIBIT A

## SOURCES AND USES OF FUNDS SCHEDULE

| **SOURCES OF FUNDS** | | | **USES OF FUNDS** | |
|---|---|---|---|---|
| **Entity Supplying Funds** | **Amount** | | **Expenses** | **Amount** |
| | | | | |
| **State Funds:** | | | **Items Paid for with LBRP** | |
| LBRP General Fund Grant | $325,479.01 | | **General Fund Grant** | |
| (Acct 379) | | | **Funds:** | |
| Other: | | | Bridge Reconstruction | $325,479.01 |
| Regular Town Bridge Funds (SAAS Acct 76) | $282,184.34 | | Construction | $217,184.34 |
| | | | Engineering | $65,000.00 |
| _____ | $ | | _____ | $ |
| | | | | |
| Subtotal | $607,663.35 | | Subtotal | $607,663.35 |
| | | | | |
| **Public Entity Funds:** | | | **Items paid for with Non-** | |
| Matching Funds | | | **LBRP General Fund** | |
| Local Match | $10,000.00 | | **Grant Funds:** | |
| | | | Bridge Construction | $10,000.00 |
| Other: | | | _____ | $ |
| _____ | $ | | _____ | $ |
| _____ | $ | | | |
| | | | | |
| Subtotal | $10,000.00 | | Subtotal | 10,000.00 |
| | | | | |
| | | | | |
| | | | | |
| | | | | |
| | | | | |
| | | | | |
| **TOTAL FUNDS** | $617,663.35 | = | **TOTAL PROJECT COSTS** | $617,663.35 |

**EXHIBIT B**

GRANT APPLICATION

Attach the grant application for the project

# EXHIBIT C

GRANTEE RESOLUTION APPROVING GRANT AGREEMENT

# Board of County Commissioners Agenda Request

**2P**
Agenda Item #

**Requested Meeting Date:** 2-13-24

**Title of Item:** Grant Agreement No. 1055207 (SAP 001-599-041)

| | |
|---|---|
| ☐ REGULAR AGENDA<br>☑ CONSENT AGENDA<br>☐ INFORMATION ONLY | **Action Requested:**<br>☐ Approve/Deny Motion<br>☑ Adopt Resolution (attach draft)<br>☐ Direction Requested<br>☐ Discussion Item<br>☐ Hold Public Hearing*<br>**provide copy of hearing notice that was published* |

| | |
|---|---|
| **Submitted by:**<br>John Welle | **Department:**<br>Highway Department |
| **Presenter (Name and Title):**<br>NA | **Estimated Time Needed:**<br>NA |

**Summary of Issue:**

SAP 001-599-041 is a bridge replacement project on 420th Avenue (Farm Island Township Road) over the Ripple River that was awarded on 12-19-23 for a cost of $202,272.00.

Funding for this project, including $25,000 of engineering costs, is as follows:
Local Bridge Replacement Program (LBRP) Grant: $207,272.00
Farm Island Township: $20,000.00

MnDOT Agreement No. 1055207 has been provided for the purpose of providing the LBRP grant. The County Attorney within the past year has reviewed the same grant agreement language for other projects and has approved the agreement as to form and content.

Authorization by the attached resolution is requested to enter into Agreement No. 1055207.

**Alternatives, Options, Effects on Others/Comments:**

**Recommended Action/Motion:**
Approve resolution

**Financial Impact:**
*Is there a cost associated with this request?* ☐ *Yes* ☑ *No*
*What is the total cost, with tax and shipping? $*
*Is this budgeted?* ☐ *Yes* ☐ *No* *Please Explain:*

Legally binding agreements must have County Attorney approval prior to submission.

**CERTIFIED COPY OF RESOLUTION OF COUNTY BOARD OF AITKIN COUNTY, MINNESOTA**

ADOPTED February 13, 2024

By Commissioner: xxx **20240213-xxx**

## Grant Agreement No. 1055207 (SAP 001-599-041)

**WHEREAS,** Aitkin County has applied to the Commissioner of Transportation for a grant from the Minnesota State Transportation Fund related to Bridge No.01J44; and

**WHEREAS,** the Commissioner of Transportation has given notice that funding for this project is available; and

**WHEREAS,** the amount of the grant has been determined to be $207,272.00 by reason of the lowest responsible bid;

**NOW THEREFORE,** be it resolved that Aitkin County does hereby agree to the terms and conditions of the grant consistent with Minnesota Statutes, section 174.50, and will pay any additional amount by which the cost exceeds the estimate, and will return to the Minnesota State Transportation Fund any amount appropriated for the project but not required. The proper county officers are authorized to execute a grant agreement and any amendments thereto with the Commissioner of Transportation concerning the above-referenced grant.

Commissioner xxx seconded the adoption of the resolution and it was declared adopted upon the following vote

xxx MEMBERS PRESENT All Members Voting xxx

**STATE OF MINNESOTA}**
**COUNTY OF AITKIN}**

I, Jessica Seibert, County Administrator, Aitkin County, Minnesota do hereby certify that I have compared the foregoing with the original resolution filed in the Administration Office of Aitkin County in Aitkin, Minnesota as stated in the minutes of the proceedings of said Board on the 13th day of February 2024, and that the same is a true and correct copy of the whole thereof.

**Witness my hand and seal this 13th day of February 2024**

Jessica Seibert
County Administrator

DEPARTMENT OF TRANSPORTATION

MnDOT Agreement No. _1055207_
SAP No. _001-599-041_

# STATE OF MINNESOTA
# LOCAL BRIDGE REPLACEMENT PROGRAM
# GRANT AGREEMENT

This agreement is between the State of Minnesota, acting through its Commissioner of Transportation ("State"), and ("Grantee"):

Public Entity (Grantee) name, address and contact person:
__Aitkin County Highway Department_____
__1211 Air Park Drive_____
__Aitkin, MN 56431_____
_____
Contact: _John Welle – 218-927-7469_____

## RECITALS

1. Minnesota Statutes § 174.50, subd. 6-7 authorize the State to enter into this agreement.
2. General Funds were appropriated for the Local Bridge Replacement Program in Minnesota Laws 2023, Chapter 68-H.F. 2887.
3. Grantee has been awarded Local Bridge Replacement Program (LBRP) funds under Minn. Stat. § 174.50, subd. 6-7.
4. Grantee represents that it is duly qualified and agrees to perform all services described in this agreement to the satisfaction of the State. Pursuant to Minn.Stat.§16B.98, Subd.1, Grantee agrees to minimize administrative costs as a condition of this agreement.

## AGREEMENT TERMS

1 **Term of Agreement, Survival of Terms, and Incorporation of Exhibits**

1.1 **Effective Date.** This agreement will be effective on the date the State obtains all required signatures under Minn. Stat.§16B.98, Subd. 5. As required by Minn.Stat.§16B.98 Subd. 7, no payments will be made to Grantee until this agreement is fully executed. Grantee must not begin work under this agreement until this agreement is fully executed and Grantee has been notified by the State's Authorized Representative to begin the work.

1.2 **Expiration Date.** This agreement will expire on December 31, 2027, or when all obligations have been satisfactorily fulfilled, whichever occurs first.

1.3 **Survival of Terms.** All clauses which impose obligations continuing in their nature and which must survive in order to give effect to their meaning will survive the expiration or termination of this agreement, including, without limitation, the following clauses: 8. Liability; 9. State Audits; 10. Government Data Practices and Intellectual Property; 11. Workers Compensation; 12. Governing Law, Jurisdiction, and Venue; and 14. Data Disclosure.

1.4 **Exhibits.** Exhibit A: Sources and Uses of Funds Schedule; Exhibit B: Grant Application; and Exhibit C: Grantee Resolution Approving Grant Agreement are attached and incorporated into this agreement.

2 **Grantee's Duties**

2.1 Grantee will conduct one or more of the following activities in accordance with its grant application, or in the case of legislatively selected projects, in accordance with the enabling session law, which is attached to this Agreement as Exhibit B: (i) constructing or reconstructing a bridge, (ii) abandoning an existing bridge that is deficient and in need of replacement, but where no replacement will be made, or (iii) constructing a road to facilitate the abandonment or removal of an existing bridge determined to be deficient.

2.2 Grantee will comply with all required grants management policies and procedures set forth through Minn.Stat.§16B.97, Subd. 4 (a) (1).

2.3 **Asset Monitoring.** If Grantee uses funds obtained by this agreement to acquire a capital asset, the Grantee is required to use that asset for a public purpose for the normal useful life of the asset. Grantee may not sell or change the purpose of use for the capital asset(s) obtained with grant funds under this agreement without the prior written consent of the State and an agreement executed and approved by the same parties who executed and approved this agreement, or their successors in office.

## 3 Time

3.1 Grantee must comply with all the time requirements described in this agreement. In the performance of this grant agreement, time is of the essence.

## 4 Consideration and Payment

4.1 **Consideration.** The State will pay for all services performed by Grantee under this agreement as follows:

4.1.1 **Compensation.** Grantee will be reimbursed for actual, incurred costs that are eligible under Minn. Stat. § 174.50, subd 6-7. Grantee shall use this grant solely to reimburse itself for expenditures it has already made to pay for the costs of one or more of the activities listed under section 2.1.

4.1.2 **Sources and Uses of Funds.** Grantee represents to State that the Sources and Uses of Funds Schedule attached as Exhibit A accurately shows the total cost of the project and all of the funds that are available for the completion of the project. Grantee agrees that it will pay for any costs that are ineligible for reimbursement and for any amount by which the costs exceed State's total obligation in section 4.1.3. Grantee will return to State any amount appropriated but not required.

4.1.3 **Total Obligation.** The total obligation of the State for all compensation and reimbursements to Grantee under this agreement will not exceed $207,272.00.

4.2 **Payment**

4.2.1 **Invoices.** Grantee will submit state aid pay requests for reimbursements requested under this grant agreement. The State will promptly pay Grantee after Grantee presents an itemized invoice for the services actually performed and the State's Authorized Representative accepts the invoiced services.

4.2.2 **All Invoices Subject to Audit.** All invoices are subject to audit, at State's discretion.

4.2.3 **State's Payment Requirements**. State will promptly pay all valid obligations under this agreement as required by Minnesota Statutes §16A.124. State will make undisputed payments no later than 30 days after receiving Grantee's invoices and progress reports for services performed. If an invoice is incorrect, defective or otherwise improper, State will notify Grantee within ten days of discovering the error. After State receives the corrected invoice, State will pay Grantee within 30 days of receipt of such invoice.

4.2.4 **Grant Monitoring Visit and Financial Reconciliation.** During the period of performance, the State will make at least annual monitoring visits and conduct annual financial reconciliations of Grantee's expenditures.

4.2.4.1 The State's Authorized Representative will notify Grantee's Authorized Representative where and when any monitoring visit and financial reconciliation will take place, which State employees and/or contractors will participate, and which Grantee staff members should be present. Grantee will be provided with at least seven calendar days of notice prior to any monitoring visit or financial reconciliation.

4.2.4.2 Following a monitoring visit or financial reconciliation, Grantee will take timely and appropriate action on all deficiencies identified by State.

4.2.4.3 At least one monitoring visit and one financial reconciliation must be completed prior to final payment being made to Grantee.

4.2.5 **Unexpended Funds.** The Grantee must promptly return to the State at grant closeout any unexpended funds that have not been accounted for in a financial report submitted to the State.

4.2.6 **Closeout.** The State will determine, at its sole discretion, whether a closeout audit is required prior to final payment approval. If a closeout audit is required, final payment will be held until the audit has been completed. Monitoring of any capital assets acquired with grant funds will continue following grant closeout.

4.3 **Contracting and Bidding Requirements.** If Grantee is a municipality as defined by Minn. Stat. § 471.345, subdivision 1, then Grantee shall comply with the requirements of Minn. Stat. § 471.345 for all procurement under this Agreement.

## 5 Conditions of Payment

All services provided by Grantee under this agreement must be performed to the State's satisfaction, as determined at the sole discretion of the State's Authorized Representative and in accordance with all applicable federal, state, and local laws, ordinances, rules, and regulations. The Grantee will not receive payment for work found by the State to be unsatisfactory or performed in violation of federal, state, or local law.

## 6 Authorized Representatives

6.1 The State's Authorized Representative is:

Marc Briese,
Programs Engineer,
MnDOT State Aid Office
395 John Ireland Boulevard, MS 500
St. Paul, MN 55155
Office: 651-366-3802
marc.briese@state.mn.us

or his/her successor. State's Authorized Representative has the responsibility to monitor Grantee's performance and the authority to accept the services provided under this agreement. If the services are satisfactory, the State's Authorized Representative will certify acceptance on each invoice submitted for payment.

6.2 Grantee's Authorized Representative is:

Aitkin County Highway Department
John Welle (or successor)
Aitkin County Engineer
1211 Air Park Drive
Aitkin, MN 56431
Phone: 218-927-3741
jwelle@co.aitkin.mn.us

If Grantee's Authorized Representative changes at any time during this agreement, Grantee will immediately notify the State.

## 7 Assignment Amendments, Waiver, and Grant Agreement Complete

7.1 **Assignment.** The Grantee may neither assign nor transfer any rights or obligations under this agreement without the prior written consent of the State and a fully executed Assignment Agreement, executed and approved by the same parties who executed and approved this agreement, or their successors in office.

7.2 **Amendments.** Any amendments to this agreement must be in writing and will not be effective until it has been executed and approved by the same parties who executed and approved the original agreement, or their successors in office.

7.3 **Waiver.** If the State fails to enforce any provision of this agreement, that failure does not waive the provision or the State's right to subsequently enforce it.

7.4 **Grant Agreement Complete.** This grant agreement contains all negotiations and agreements between the State and Grantee. No other understanding regarding this agreement, whether written or oral, may be used to bind either party.

7.5 **Electronic Records and Signatures.** The parties agree to contract by electronic means. This includes using electronic signatures and converting original documents to electronic records.

7.6 **Certification.** By signing this Agreement, the Grantee certifies that it is not suspended or debarred from receiving federal or state awards.

## 8 Liability

Grantee and State agree that each will be responsible for its own acts and the results thereof to the extent authorized by law, and neither shall be responsible for the acts of the other party and the results thereof. The liability of State is governed by the provisions of Minn. Stat. Sec. 3.736. If Grantee is a "municipality" as that term is used in Minn. Stat. Chapter 466, then the liability of Grantee is governed by the provisions of Chapter 466. Grantee's liability hereunder shall not be limited to the extent of insurance carried by or provided by Grantee, or subject to any exclusion from coverage in any insurance policy.

## 9 State Audits

Under Minn. Stat. § 16B.98, Subd.8, the Grantee's books, records, documents, and accounting procedures and practices of Grantee, or other party relevant to this grant agreement or transaction, are subject to examination by the State and/or

the State Auditor or Legislative Auditor, as appropriate, for a minimum of six years from the end of this agreement, receipt and approval of all final reports, or the required period of time to satisfy all state and program retention requirements, whichever is later. Grantee will take timely and appropriate action on all deficiencies identified by an audit.

10 **Government Date Practices and Intellectual Property Rights**

10.1 **Government Data Practices.** Grantee and State must comply with the Minnesota Government Data Practices Act, Minn. Stat. Ch. 13, as it applies to all data provided by the State under this grant agreement, and as it applies to all data created, collected, received, stored, used, maintained, or disseminated by the Grantee under this agreement. The civil remedies of Minn. Stat. §13.08 apply to the release of the data referred to in this clause by either Grantee or the State.

11 **Workers Compensation**

The Grantee certifies that it is in compliance with Minn. Stat. §176.181, Subd. 2, pertaining to workers' compensation insurance coverage. The Grantee's employees and agents will not be considered State employees. Any claims that may arise under the Minnesota Workers' Compensation Act on behalf of these employees and any claims made by any third party as a consequence of any act or omission on the part of these employees are in no way the State's obligation or responsibility.

12 **Governing Law, Jurisdiction, and Venue**

Minnesota law, without regard to its choice-of-law provisions, governs this agreement. Venue for all legal proceedings out of this agreement, or its breach, must be in the appropriate state or federal court with competent jurisdiction in Ramsey County, Minnesota.

13 **Termination; Suspension**

13.1 **Termination by the State.** The State may terminate this agreement with or without cause, upon 30 days written notice to the Grantee. Upon termination, the Grantee will be entitled to payment, determined on a pro rata basis, for services satisfactorily performed.

13.2 **Termination for Cause.** The State may immediately terminate this grant agreement if the State finds that there has been a failure to comply with the provisions of this agreement, that reasonable progress has not been made, that fraudulent or wasteful activity has occurred, that Grantee has been convicted of a criminal offense relating to a state grant agreement, or that the purposes for which the funds were granted have not been or will not be fulfilled. The State may take action to protect the interests of the State of Minnesota, including the refusal to disburse additional funds and requiring the return of all or part of the funds already disbursed.

13.3 **Termination for Insufficient Funding.** The State may immediately terminate this agreement if:

13.3.1 It does not obtain funding from the Minnesota Legislature; or

13.3.2 If funding cannot be continued at a level sufficient to allow for the payment of the services covered here. Termination must be by written or fax notice to the Grantee. The State is not obligated to pay for any services that are provided after notice and effective date of termination. However, the Grantee will be entitled to payment, determined on a pro rata basis, for services satisfactorily performed to the extent that funds are available. The State will not be assessed any penalty if the agreement is terminated because of the decision of the Minnesota Legislature, or other funding source, not to appropriate funds. The State will provide the Grantee notice of the lack of funding within a reasonable time of the State's receiving that notice.

13.4 **Suspension.** The State may immediately suspend this agreement in the event of a total or partial government shutdown due to the failure to have an approved budget by the legal deadline. Work performed by the Grantee during a period of suspension will be deemed unauthorized and undertaken at risk of non-payment.

14 **Data Disclosure**

Under Minn. Stat. § 270C.65, Subd. 3, and other applicable law, Grantee consents to disclosure of its social security number, federal employer tax identification number, and/or Minnesota tax identification number, already provided to the State, to federal and state tax agencies and state personnel involved in the payment of state obligations. These identification numbers may be used in the enforcement of federal and state tax laws which could result in action requiring the Grantee to file state tax returns and pay delinquent state tax liabilities, if any.

15 **Fund Use Prohibited.** The Grantee will not utilize any funds received pursuant to this Agreement to compensate, either directly or indirectly, any contractor, corporation, partnership, or business, however organized, which is disqualified or debarred from entering into or receiving a State contract. This restriction applies regardless of whether the disqualified or debarred party acts in the capacity of a general contractor, a subcontractor, or as an equipment or material supplier. This restriction does not prevent the Grantee from utilizing these funds to pay any party who might be disqualified or debarred after the Grantee's contract award on this Project.

16 **Discrimination Prohibited by Minnesota Statutes §181.59.** Grantee will comply with the provisions of Minnesota Statutes §181.59 which requires that every contract for or on behalf of the State of Minnesota, or any county, city, town, township, school, school district or any other district in the state, for materials, supplies or construction will contain provisions by which Contractor agrees: 1) That, in the hiring of common or skilled labor for the performance of any work under any contract, or any subcontract, no Contractor, material supplier or vendor, will, by reason of race, creed or color, discriminate against the person or persons who are citizens of the United States or resident aliens who are qualified and available to perform the work to which the employment relates; 2) That no Contractor, material supplier, or vendor, will, in any manner, discriminate against, or intimidate, or prevent the employment of any person or persons identified in clause 1 of this section, or on being hired, prevent or conspire to prevent, the person or persons from the performance of work under any contract on account of race, creed or color; 3) That a violation of this section is a misdemeanor; and 4) That this contract may be canceled or terminated by the state of Minnesota, or any county, city, town, township, school, school district or any other person authorized to grant contracts for employment, and all money due, or to become due under the contract, may be forfeited for a second or any subsequent violation of the terms or conditions of this Agreement.

17 **Limitation.** Under this Agreement, the State is only responsible for receiving and disbursing funds. Nothing in this Agreement will be construed to make the State a principal, co-principal, partner, or joint venturer with respect to the Project(s) covered herein. The State may provide technical advice and assistance as requested by the Grantee, however, the Grantee will remain responsible for providing direction to its contractors and consultants and for administering its contracts with such entities. The Grantee's consultants and contractors are not intended to be third party beneficiaries of this Agreement.

18 **Additional Provisions**

18.1 **Prevailing Wages.** Grantee agrees to comply with all of the applicable provisions contained in Minnesota Statutes Chapter 177, and specifically those provisions contained in Minn. Stat.§. 177.41 through 177.435 as they may be amended or replaced from time to time with respect to the project. By agreeing to this provision, Grantee is not acknowledging or agreeing that the cited provisions apply to the project.

18.2 **E-Verification.** Grantee agrees and acknowledges that it is aware of Minn.Stat. § 16C.075 regarding e-verification of employment of all newly hired employees to confirm that such employees are legally entitled to work in the United States, and that it will, if and when applicable, fully comply with such order.

18.3 **Telecommunications Certification.** If federal funds are included in Exhibit A, by signing this agreement Grantee certifies that, consistent with Section 889 of the John S. McCain National Defense Authorization Act for Fiscal Year 2019, Pub. L. 115-232 (Aug. 13, 2018), Grantee does not and will not use any equipment, system, or service that uses "covered telecommunications equipment or services" (as that term is defined in Section 889 of the Act) as a substantial or essential component of any system or as critical technology as part of any system. Grantee will include this certification as a flow down clause in any contract related to this agreement.

18.4 **Title VI/Non-discrimination Assurances.** Grantee agrees to comply with all applicable US DOT Standard Title VI/Non-Discrimination Assurances contained in DOT Order No. 1050.2A, and in particular Appendices A and E, which can be found at: https://edocs-public.dot.state.mn.us/edocs_public/DMResultSet/download?docId=11149035. If federal funds are included in Exhibit A, Grantee will ensure the appendices and solicitation language within the assurances are inserted into contracts as required. State may conduct a review of the Grantee's compliance with this provision. The

Grantee must cooperate with State throughout the review process by supplying all requested information and documentation to State, making Grantee staff and officials available for meetings as requested, and correcting any areas of non-compliance as determined by State.

18.5 **Use, Maintenance, Repair and Alterations**. The Grantee shall not, without the written consent of the State and the Commissioner, (i) permit or allow the use of any of the property improved with these grants funds (the Real Property) for any purpose other than in conjunction with or for the operation of a county highway, county state-aid highway, town road, or city street or for other uses customarily associated therewith, such as trails and utility corridors, (ii) substantially alter any of the Real Property except such alterations as may be required by laws, ordinances or regulations, or such other alterations as may improve the Real Property by increasing its value or which improve its ability to be used for the purposes set forth in section (i), (iii) take any action which would unduly impair or depreciate the value of the Real Property, (iv) abandon the Real Property, or (v) commit or permit any act to be done in or on the Real Property in violation of any law, ordinance or regulation.

If the Grantee fails to maintain the Real Property in accordance with this Section, the State may perform whatever acts and expend whatever funds necessary to so maintain the Real Property, and the Grantee irrevocably authorizes the State to enter upon the Real Property to perform such acts as may be necessary to so maintain the Real Property. Any actions taken or funds expended by the State shall be at its sole discretion, and nothing contained herein shall require the State to take any action or incur any expense and the State shall not be responsible, or liable to the Grantee or any other entity, for any such acts that are performed in good faith and not in a negligent manner. Any funds expended by the State pursuant to this Section shall be due and payable on demand by the State and will bear interest from the date of payment by the State at a rate equal to the lesser of the maximum interest rate allowed by law or 18% per year based upon a 365-day year.

**[The remainder of this page has intentionally been left blank.]**

**GRANTEE**
*The Grantee certifies that the appropriate person(s) have executed the grant agreement on behalf of the Grantee as required by applicable articles, bylaws, resolutions, or ordinances.*

By:_____

Title:_____

Date:_____

By:_____

Title:_____

Date:_____

By:_____

Title:_____

Date:_____

**DEPARTMENT OF TRANSPORTATION**
*Approval and Certifying Encumbrance*

By:_____
(with delegated authority)

Title: State Aid Programs Manager

Date:_____

**DEPARTMENT OF TRANSPORTATION**
**CONTRACT MANAGEMENT**

By:_____

Date:_____

# EXHIBIT A

## SOURCES AND USES OF FUNDS SCHEDULE

| **SOURCES OF FUNDS** | | | **USES OF FUNDS** | |
|---|---|---|---|---|
| **Entity Supplying Funds** | **Amount** | | **Expenses** | **Amount** |
| | | | | |
| **State Funds:** | | | **Items Paid for with LBRP** | |
| LBRP General Fund Grant (Acct 379) | $ 207,272.00 | | **General Fund Grant** | |
| | | | **Funds:** | |
| Other: | | | Construction | $192,272.00 |
| _____ | $ _____ | | Engineering | $15,000.00 |
| _____ | $ _____ | | _____ | $ _____ |
| _____ | $ _____ | | _____ | $ _____ |
| | | | | |
| Subtotal | $ 207,272.00 | | Subtotal | $ 207,272.00 |
| | | | | |
| **Public Entity Funds:** | | | **Items paid for with Non-** | |
| Matching Funds | $ _____ | | **LBRP General Fund** | |
| Local Match | $20,000.00 | | **Grant Funds:** | |
| Other: | | | Bridge Construction | $ 20,000.00 |
| _____ | $ _____ | | _____ | $ _____ |
| _____ | $ _____ | | _____ | $ _____ |
| _____ | $ _____ | | | |
| | | | Subtotal | $20,000.00 |
| Subtotal | $20,000.00 | | | |
| | | | | |
| | | | | |
| | | | | |
| | | | | |
| | | | | |
| | | | | |
| | | | | |
| **TOTAL FUNDS** | $ 227,272.00 | = | **TOTAL PROJECT COSTS** | $ 227,272.00 |

**EXHIBIT B**

GRANT APPLICATION

Attach the grant application for the project

# EXHIBIT C

GRANTEE RESOLUTION APPROVING GRANT AGREEMENT

# Board of County Commissioners Agenda Request

**2Q**
Agenda Item #

**Requested Meeting Date:** 2-13-24

**Title of Item:** Grant Agreement No. 1055737 (SP 001-605-016)

| | | |
|---|---|---|
| ☐ REGULAR AGENDA<br>☑ CONSENT AGENDA<br>☐ INFORMATION ONLY | **Action Requested:**<br>☐ Approve/Deny Motion<br>☑ Adopt Resolution (attach draft) | ☐ Direction Requested<br>☐ Discussion Item<br>☐ Hold Public Hearing*<br>**provide copy of hearing notice that was published* |

| | |
|---|---|
| **Submitted by:**<br>John Welle | **Department:**<br>Highway Department |
| **Presenter (Name and Title):**<br>NA | **Estimated Time Needed:**<br>NA |

**Summary of Issue:**

SP 001-605-016 is a bridge replacement project on CSAH 5 over the Willow River that was awarded on 12-19-23 for a cost of $1,050,797.20.

Funding for this project is as follows:
Bridge Formula Program Federal Funds: $1,022,771.00
Local Bridge Replacement Program (LBRP) Grant: $25,355.85
Aiktin CSAH Construction funds: $2,670.35

MnDOT Agreement No. 1055737 has been provided for the purpose of providing the LBRP grant. The County Attorney within the past year has reviewed the same grant agreement language for other projects and has approved the agreement as to form and content.

Authorization by the attached resolution is requested to enter into Agreement No. 1055737.

**Alternatives, Options, Effects on Others/Comments:**

**Recommended Action/Motion:**
Approve resolution

**Financial Impact:**
*Is there a cost associated with this request?* ☐ *Yes* ☑ *No*
*What is the total cost, with tax and shipping? $*
*Is this budgeted?* ☐ *Yes* ☐ *No* *Please Explain:*

Legally binding agreements must have County Attorney approval prior to submission.

**CERTIFIED COPY OF RESOLUTION OF COUNTY BOARD OF AITKIN COUNTY, MINNESOTA**

ADOPTED February 13, 2024

By Commissioner: xxx **20240213-xxx**

**Grant Agreement No. 1055737 (SAP 001-605-016)**

**WHEREAS,** Aitkin County has applied to the Commissioner of Transportation for a grant from the Minnesota State Transportation Fund related to Bridge No.01539; and

**WHEREAS,** the Commissioner of Transportation has given notice that funding for this project is available; and

**WHEREAS,** the amount of the grant has been determined to be $25,355.85 by reason of the lowest responsible bid;

**NOW THEREFORE,** be it resolved that Aitkin County does hereby agree to the terms and conditions of the grant consistent with Minnesota Statutes, section 174.50, and will pay any additional amount by which the cost exceeds the estimate, and will return to the Minnesota State Transportation Fund any amount appropriated for the project but not required. The proper county officers are authorized to execute a grant agreement and any amendments thereto with the Commissioner of Transportation concerning the above-referenced grant.

Commissioner xxx seconded the adoption of the resolution and it was declared adopted upon the following vote

xxx MEMBERS PRESENT All Members Voting xxx

**STATE OF MINNESOTA}**
**COUNTY OF AITKIN}**

I, Jessica Seibert, County Administrator, Aitkin County, Minnesota do hereby certify that I have compared the foregoing with the original resolution filed in the Administration Office of Aitkin County in Aitkin, Minnesota as stated in the minutes of the proceedings of said Board on the 13th day of February 2024, and that the same is a true and correct copy of the whole thereof.

**Witness my hand and seal this 13th day of February 2024**

Jessica Seibert
County Administrator

DEPARTMENT OF TRANSPORTATION

MnDOT Agreement No. 1055737
SP No. _001-605-016_

# STATE OF MINNESOTA
# LOCAL BRIDGE REPLACEMENT PROGRAM
# GRANT AGREEMENT

This agreement is between the State of Minnesota, acting through its Commissioner of Transportation ("State"), and ("Grantee"):

Public Entity (Grantee) name, address and contact person:
___Aitkin County Highway Department_____
___1211 Air Park Drive_____
___Aitkin, MN 56431_____
_____
Contact: _John Welle – 218-927-7469_____

## RECITALS

1. Minnesota Statutes § 174.50, subd. 6-7 authorize the State to enter into this agreement.
2. General Funds were appropriated for the Local Bridge Replacement Program in Minnesota Laws 2023, Chapter 68-H.F. 2887.
3. Grantee has been awarded Local Bridge Replacement Program (LBRP) funds under Minn. Stat. § 174.50, subd. 6-7.
4. Grantee represents that it is duly qualified and agrees to perform all services described in this agreement to the satisfaction of the State. Pursuant to Minn.Stat.§16B.98, Subd.1, Grantee agrees to minimize administrative costs as a condition of this agreement.

## AGREEMENT TERMS

1 **Term of Agreement, Survival of Terms, and Incorporation of Exhibits**

1.1 **Effective Date.** This agreement will be effective on the date the State obtains all required signatures under Minn. Stat.§16B.98, Subd. 5. As required by Minn.Stat.§16B.98 Subd. 7, no payments will be made to Grantee until this agreement is fully executed. Grantee must not begin work under this agreement until this agreement is fully executed and Grantee has been notified by the State's Authorized Representative to begin the work.

1.2 **Expiration Date.** This agreement will expire on December 31, 2027 or when all obligations have been satisfactorily fulfilled, whichever occurs first.

1.3 **Survival of Terms.** All clauses which impose obligations continuing in their nature and which must survive in order to give effect to their meaning will survive the expiration or termination of this agreement, including, without limitation, the following clauses: 8. Liability; 9. State Audits; 10. Government Data Practices and Intellectual Property; 11. Workers Compensation; 12. Governing Law, Jurisdiction, and Venue; and 14. Data Disclosure.

1.4 **Exhibits.** Exhibit A: Sources and Uses of Funds Schedule; Exhibit B: Grant Application; and Exhibit C: Grantee Resolution Approving Grant Agreement are attached and incorporated into this agreement.

2 **Grantee's Duties**

2.1 Grantee will conduct one or more of the following activities in accordance with its grant application, or in the case of legislatively selected projects, in accordance with the enabling session law, which is attached to this Agreement as Exhibit B: (i) constructing or reconstructing a bridge, (ii) abandoning an existing bridge that is deficient and in need of replacement, but where no replacement will be made, or (iii) constructing a road to facilitate the abandonment or removal of an existing bridge determined to be deficient.

2.2 Grantee will comply with all required grants management policies and procedures set forth through Minn.Stat.§16B.97, Subd. 4 (a) (1).

2.3 **Asset Monitoring.** If Grantee uses funds obtained by this agreement to acquire a capital asset, the Grantee is required to use that asset for a public purpose for the normal useful life of the asset. Grantee may not sell or change the purpose of use for the capital asset(s) obtained with grant funds under this agreement without the prior written consent of the State and an agreement executed and approved by the same parties who executed and approved this agreement, or their successors in office.

## 3 Time

3.1 Grantee must comply with all the time requirements described in this agreement. In the performance of this grant agreement, time is of the essence.

## 4 Consideration and Payment

4.1 **Consideration.** The State will pay for all services performed by Grantee under this agreement as follows:

4.1.1 **Compensation.** Grantee will be reimbursed for actual, incurred costs that are eligible under Minn. Stat. § 174.50, subd 6-7. Grantee shall use this grant solely to reimburse itself for expenditures it has already made to pay for the costs of one or more of the activities listed under section 2.1.

4.1.2 **Sources and Uses of Funds.** Grantee represents to State that the Sources and Uses of Funds Schedule attached as Exhibit A accurately shows the total cost of the project and all of the funds that are available for the completion of the project. Grantee agrees that it will pay for any costs that are ineligible for reimbursement and for any amount by which the costs exceed State's total obligation in section 4.1.3. Grantee will return to State any amount appropriated but not required.

4.1.3 **Total Obligation.** The total obligation of the State for all compensation and reimbursements to Grantee under this agreement will not exceed $25,355.85.

4.2 **Payment**

4.2.1 **Invoices.** Grantee will submit state aid pay requests for reimbursements requested under this grant agreement. The State will promptly pay Grantee after Grantee presents an itemized invoice for the services actually performed and the State's Authorized Representative accepts the invoiced services.

4.2.2 **All Invoices Subject to Audit.** All invoices are subject to audit, at State's discretion.

4.2.3 **State's Payment Requirements**. State will promptly pay all valid obligations under this agreement as required by Minnesota Statutes §16A.124. State will make undisputed payments no later than 30 days after receiving Grantee's invoices and progress reports for services performed. If an invoice is incorrect, defective or otherwise improper, State will notify Grantee within ten days of discovering the error. After State receives the corrected invoice, State will pay Grantee within 30 days of receipt of such invoice.

4.2.4 **Grant Monitoring Visit and Financial Reconciliation.** During the period of performance, the State will make at least annual monitoring visits and conduct annual financial reconciliations of Grantee's expenditures.

4.2.4.1 The State's Authorized Representative will notify Grantee's Authorized Representative where and when any monitoring visit and financial reconciliation will take place, which State employees and/or contractors will participate, and which Grantee staff members should be present. Grantee will be provided with at least seven calendar days of notice prior to any monitoring visit or financial reconciliation.

4.2.4.2 Following a monitoring visit or financial reconciliation, Grantee will take timely and appropriate action on all deficiencies identified by State.

4.2.4.3 At least one monitoring visit and one financial reconciliation must be completed prior to final payment being made to Grantee.

4.2.5 **Unexpended Funds.** The Grantee must promptly return to the State at grant closeout any unexpended funds that have not been accounted for in a financial report submitted to the State.

4.2.6 **Closeout.** The State will determine, at its sole discretion, whether a closeout audit is required prior to final payment approval. If a closeout audit is required, final payment will be held until the audit has been completed. Monitoring of any capital assets acquired with grant funds will continue following grant closeout.

4.3 **Contracting and Bidding Requirements.** If Grantee is a municipality as defined by Minn. Stat. § 471.345, subdivision 1, then Grantee shall comply with the requirements of Minn. Stat. § 471.345 for all procurement under this Agreement.

## 5 Conditions of Payment

All services provided by Grantee under this agreement must be performed to the State's satisfaction, as determined at the sole discretion of the State's Authorized Representative and in accordance with all applicable federal, state, and local laws, ordinances, rules, and regulations. The Grantee will not receive payment for work found by the State to be unsatisfactory or performed in violation of federal, state, or local law.

## 6 Authorized Representatives

6.1 The State's Authorized Representative is:

Marc Briese,
Programs Engineer,
MnDOT State Aid Office
395 John Ireland Boulevard, MS 500
St. Paul, MN 55155
Office: 651-366-3802
marc.briese@state.mn.us

or his/her successor. State's Authorized Representative has the responsibility to monitor Grantee's performance and the authority to accept the services provided under this agreement. If the services are satisfactory, the State's Authorized Representative will certify acceptance on each invoice submitted for payment.

6.2 Grantee's Authorized Representative is:

Aitkin County Highway Department
John Welle (or successor)
Aitkin County Engineer
1211 Air Park Drive
Aitkin, MN 56431
Phone: 218-927-3741
jwelle@co.aitkin.mn.us

If Grantee's Authorized Representative changes at any time during this agreement, Grantee will immediately notify the State.

7 **Assignment Amendments, Waiver, and Grant Agreement Complete**

7.1 **Assignment.** The Grantee may neither assign nor transfer any rights or obligations under this agreement without the prior written consent of the State and a fully executed Assignment Agreement, executed and approved by the same parties who executed and approved this agreement, or their successors in office.

7.2 **Amendments.** Any amendments to this agreement must be in writing and will not be effective until it has been executed and approved by the same parties who executed and approved the original agreement, or their successors in office.

7.3 **Waiver.** If the State fails to enforce any provision of this agreement, that failure does not waive the provision or the State's right to subsequently enforce it.

7.4 **Grant Agreement Complete.** This grant agreement contains all negotiations and agreements between the State and Grantee. No other understanding regarding this agreement, whether written or oral, may be used to bind either party.

7.5 **Electronic Records and Signatures.** The parties agree to contract by electronic means. This includes using electronic signatures and converting original documents to electronic records.

7.6 **Certification.** By signing this Agreement, the Grantee certifies that it is not suspended or debarred from receiving federal or state awards.

8 **Liability**

Grantee and State agree that each will be responsible for its own acts and the results thereof to the extent authorized by law, and neither shall be responsible for the acts of the other party and the results thereof. The liability of State is governed by the provisions of Minn. Stat. Sec. 3.736. If Grantee is a "municipality" as that term is used in Minn. Stat. Chapter 466, then the liability of Grantee is governed by the provisions of Chapter 466. Grantee's liability hereunder shall not be limited to the extent of insurance carried by or provided by Grantee, or subject to any exclusion from coverage in any insurance policy.

9 **State Audits**

Under Minn. Stat. § 16B.98, Subd.8, the Grantee's books, records, documents, and accounting procedures and practices

of Grantee, or other party relevant to this grant agreement or transaction, are subject to examination by the State and/or the State Auditor or Legislative Auditor, as appropriate, for a minimum of six years from the end of this agreement, receipt and approval of all final reports, or the required period of time to satisfy all state and program retention requirements, whichever is later. Grantee will take timely and appropriate action on all deficiencies identified by an audit.

10 **Government Date Practices and Intellectual Property Rights**

10.1 **Government Data Practices.** Grantee and State must comply with the Minnesota Government Data Practices Act, Minn. Stat. Ch. 13, as it applies to all data provided by the State under this grant agreement, and as it applies to all data created, collected, received, stored, used, maintained, or disseminated by the Grantee under this agreement. The civil remedies of Minn. Stat. §13.08 apply to the release of the data referred to in this clause by either Grantee or the State.

11 **Workers Compensation**

The Grantee certifies that it is in compliance with Minn. Stat. §176.181, Subd. 2, pertaining to workers' compensation insurance coverage. The Grantee's employees and agents will not be considered State employees. Any claims that may arise under the Minnesota Workers' Compensation Act on behalf of these employees and any claims made by any third party as a consequence of any act or omission on the part of these employees are in no way the State's obligation or responsibility.

12 **Governing Law, Jurisdiction, and Venue**

Minnesota law, without regard to its choice-of-law provisions, governs this agreement. Venue for all legal proceedings out of this agreement, or its breach, must be in the appropriate state or federal court with competent jurisdiction in Ramsey County, Minnesota.

13 **Termination; Suspension**

13.1 **Termination by the State.** The State may terminate this agreement with or without cause, upon 30 days written notice to the Grantee. Upon termination, the Grantee will be entitled to payment, determined on a pro rata basis, for services satisfactorily performed.

13.2 **Termination for Cause.** The State may immediately terminate this grant agreement if the State finds that there has been a failure to comply with the provisions of this agreement, that reasonable progress has not been made, that fraudulent or wasteful activity has occurred, that Grantee has been convicted of a criminal offense relating to a state grant agreement, or that the purposes for which the funds were granted have not been or will not be fulfilled. The State may take action to protect the interests of the State of Minnesota, including the refusal to disburse additional funds and requiring the return of all or part of the funds already disbursed.

13.3 **Termination for Insufficient Funding.** The State may immediately terminate this agreement if:

13.3.1 It does not obtain funding from the Minnesota Legislature; or

13.3.2 If funding cannot be continued at a level sufficient to allow for the payment of the services covered here. Termination must be by written or fax notice to the Grantee. The State is not obligated to pay for any services that are provided after notice and effective date of termination. However, the Grantee will be entitled to payment, determined on a pro rata basis, for services satisfactorily performed to the extent that funds are available. The State will not be assessed any penalty if the agreement is terminated because of the decision of the Minnesota Legislature, or other funding source, not to appropriate funds. The State will provide the Grantee notice of the lack of funding within a reasonable time of the State's receiving that notice.

13.4 **Suspension.** The State may immediately suspend this agreement in the event of a total or partial government shutdown due to the failure to have an approved budget by the legal deadline. Work performed by the Grantee during a period of suspension will be deemed unauthorized and undertaken at risk of non-payment.

14 **Data Disclosure**

Under Minn. Stat. § 270C.65, Subd. 3, and other applicable law, Grantee consents to disclosure of its social security number, federal employer tax identification number, and/or Minnesota tax identification number, already provided to the State, to federal and state tax agencies and state personnel involved in the payment of state obligations. These identification numbers may be used in the enforcement of federal and state tax laws which could result in action

requiring the Grantee to file state tax returns and pay delinquent state tax liabilities, if any.

15 **Fund Use Prohibited.** The Grantee will not utilize any funds received pursuant to this Agreement to compensate, either directly or indirectly, any contractor, corporation, partnership, or business, however organized, which is disqualified or debarred from entering into or receiving a State contract. This restriction applies regardless of whether the disqualified or debarred party acts in the capacity of a general contractor, a subcontractor, or as an equipment or material supplier. This restriction does not prevent the Grantee from utilizing these funds to pay any party who might be disqualified or debarred after the Grantee's contract award on this Project.

16 **Discrimination Prohibited by Minnesota Statutes §181.59.** Grantee will comply with the provisions of Minnesota Statutes §181.59 which requires that every contract for or on behalf of the State of Minnesota, or any county, city, town, township, school, school district or any other district in the state, for materials, supplies or construction will contain provisions by which Contractor agrees: 1) That, in the hiring of common or skilled labor for the performance of any work under any contract, or any subcontract, no Contractor, material supplier or vendor, will, by reason of race, creed or color, discriminate against the person or persons who are citizens of the United States or resident aliens who are qualified and available to perform the work to which the employment relates; 2) That no Contractor, material supplier, or vendor, will, in any manner, discriminate against, or intimidate, or prevent the employment of any person or persons identified in clause 1 of this section, or on being hired, prevent or conspire to prevent, the person or persons from the performance of work under any contract on account of race, creed or color; 3) That a violation of this section is a misdemeanor; and 4) That this contract may be canceled or terminated by the state of Minnesota, or any county, city, town, township, school, school district or any other person authorized to grant contracts for employment, and all money due, or to become due under the contract, may be forfeited for a second or any subsequent violation of the terms or conditions of this Agreement.

17 **Limitation.** Under this Agreement, the State is only responsible for receiving and disbursing funds. Nothing in this Agreement will be construed to make the State a principal, co-principal, partner, or joint venturer with respect to the Project(s) covered herein. The State may provide technical advice and assistance as requested by the Grantee, however, the Grantee will remain responsible for providing direction to its contractors and consultants and for administering its contracts with such entities. The Grantee's consultants and contractors are not intended to be third party beneficiaries of this Agreement.

18 **Additional Provisions**

18.1 **Prevailing Wages.** Grantee agrees to comply with all of the applicable provisions contained in Minnesota Statutes Chapter 177, and specifically those provisions contained in Minn. Stat.§. 177.41 through 177.435 as they may be amended or replaced from time to time with respect to the project. By agreeing to this provision, Grantee is not acknowledging or agreeing that the cited provisions apply to the project.

18.2 **E-Verification.** Grantee agrees and acknowledges that it is aware of Minn.Stat. § 16C.075 regarding e-verification of employment of all newly hired employees to confirm that such employees are legally entitled to work in the United States, and that it will, if and when applicable, fully comply with such order.

18.3 **Telecommunications Certification.** If federal funds are included in Exhibit A, by signing this agreement Grantee certifies that, consistent with Section 889 of the John S. McCain National Defense Authorization Act for Fiscal Year 2019, Pub. L. 115-232 (Aug. 13, 2018), Grantee does not and will not use any equipment, system, or service that uses "covered telecommunications equipment or services" (as that term is defined in Section 889 of the Act) as a substantial or essential component of any system or as critical technology as part of any system. Grantee will include this certification as a flow down clause in any contract related to this agreement.

18.4 **Title VI/Non-discrimination Assurances.** Grantee agrees to comply with all applicable US DOT Standard Title VI/Non-Discrimination Assurances contained in DOT Order No. 1050.2A, and in particular Appendices A and E, which can be found at: https://edocs-public.dot.state.mn.us/edocs_public/DMResultSet/download?docId=11149035. If federal funds are included in Exhibit A, Grantee will ensure the appendices and solicitation language within the assurances are

inserted into contracts as required. State may conduct a review of the Grantee's compliance with this provision. The Grantee must cooperate with State throughout the review process by supplying all requested information and documentation to State, making Grantee staff and officials available for meetings as requested, and correcting any areas of non-compliance as determined by State.

18.5 **Use, Maintenance, Repair and Alterations**. The Grantee shall not, without the written consent of the State and the Commissioner, (i) permit or allow the use of any of the property improved with these grants funds (the Real Property) for any purpose other than in conjunction with or for the operation of a county highway, county state-aid highway, town road, or city street or for other uses customarily associated therewith, such as trails and utility corridors, (ii) substantially alter any of the Real Property except such alterations as may be required by laws, ordinances or regulations, or such other alterations as may improve the Real Property by increasing its value or which improve its ability to be used for the purposes set forth in section (i), (iii) take any action which would unduly impair or depreciate the value of the Real Property, (iv) abandon the Real Property, or (v) commit or permit any act to be done in or on the Real Property in violation of any law, ordinance or regulation.

If the Grantee fails to maintain the Real Property in accordance with this Section, the State may perform whatever acts and expend whatever funds necessary to so maintain the Real Property, and the Grantee irrevocably authorizes the State to enter upon the Real Property to perform such acts as may be necessary to so maintain the Real Property. Any actions taken or funds expended by the State shall be at its sole discretion, and nothing contained herein shall require the State to take any action or incur any expense and the State shall not be responsible, or liable to the Grantee or any other entity, for any such acts that are performed in good faith and not in a negligent manner. Any funds expended by the State pursuant to this Section shall be due and payable on demand by the State and will bear interest from the date of payment by the State at a rate equal to the lesser of the maximum interest rate allowed by law or 18% per year based upon a 365-day year.

**[The remainder of this page has intentionally been left blank.]**

**GRANTEE**
*The Grantee certifies that the appropriate person(s) have executed the grant agreement on behalf of the Grantee as required by applicable articles, bylaws, resolutions, or ordinances.*

By:_____

Title:_____

Date:_____

By:_____

Title:_____

Date:_____

By:_____

Title:_____

Date:_____

**DEPARTMENT OF TRANSPORTATION**
*Approval and Certifying Encumbrance*

By:_____
(with delegated authority)

Title: State Aid Programs Manager

Date:_____

**DEPARTMENT OF TRANSPORTATION**
**CONTRACT MANAGEMENT**

By:_____

Date:_____

# EXHIBIT A

## SOURCES AND USES OF FUNDS SCHEDULE

| SOURCES OF FUNDS | | | USES OF FUNDS | |
|---|---|---|---|---|
| **Entity Supplying Funds** | **Amount** | | **Expenses** | **Amount** |
| | | | | |
| **State Funds:** | | | **Items Paid for with LBRP** | |
| LBRP General Fund Grant (SAAS Acct 379) | $25,355.85 | | **General Fund Grant Funds:** | |
| | | | | |
| Other: | | | Bridge Construction | $25,355.85 |
| | | | _____ | $_____ |
| | | | _____ | $_____ |
| _____ | $_____ | | _____ | $_____ |
| | | | | |
| Subtotal | $25,355.85 | | Subtotal | $25,355.85 |
| | | | | |
| **Public Entity Funds:** | | | **Items paid for with Non-** | |
| Matching Funds | | | **LBRP General Fund** | |
| Local Match | $2,670.35 | | **Grant Funds:** | |
| Other: | | | | |
| Federal Funds | $1,022,771.00 | | Bridge Construction | $1,025,441.35 |
| (Bridge Formula Program) | | | _____ | |
| | $_____ | | | |
| | | | | |
| | | | | |
| | | | | |
| Subtotal | $1,025,441.35 | | Subtotal | $1,025,441.35 |
| | | | | |
| | | | | |
| | | | | |
| | | | | |
| | | | | |
| | | | | |
| **TOTAL FUNDS** | $1,050,797.20 | = | **TOTAL PROJECT COSTS** | $1,050,797.20 |

**EXHIBIT B**

GRANT APPLICATION

Attach the grant application for the project

# EXHIBIT C

## GRANTEE RESOLUTION APPROVING GRANT AGREEMENT

| Vendor No. | Name / Account/Formula | Rpt Accr | Amount | Warrant Description / Service Dates | Invoice # / Paid On Bhf # | Account/Formula Description / On Behalf of Name | 1099 |
|---|---|---|---|---|---|---|---|
| **5462** | **Bremer Bank (Elan ACH)** | | | | | | |
| 39 | 01-053-000-0000-6268 | | 450.00 | APRIL K. TRAIN FIRSTAID/CPR/AE | 0153-78072 | Staff Training, Development | N |
| 33 | 01-280-000-0000-6405 | | 73.92 | EM MEETING SUPPLIES FOR LUNCH | 087500 | Office Supplies | N |
| 35 | 01-200-003-0000-6330 | | 17.00 | JEN'S POR TRAINING-KANABEC-GAS | 10735 | Transportation/Travel/Parking | N |
| 3 | 01-122-000-0000-6241 | | 405.00 | FEB CONVENTION- K. TURNOCK | 1217 | Registration Fee | N |
| 4 | 01-122-000-0000-6240 | | 340.00 | MOWA MEMBERSHIP | 1218 | Membership/Dues/Association Fees | N |
| | | | | 01/01/2024 12/31/2024 | | | |
| 8 | 01-122-000-0000-6241 | | 80.00- | INCORRECT CHARGE FOR REG FEE | 1235 | Registration Fee | N |
| 11 | 01-122-000-0000-6241 | | 275.00 | MOWA - C.PLAGGE | 1241 | Registration Fee | N |
| 38 | 01-252-252-0000-6465 | | 327.62 | VOLLEYBALL NET | 154239 | Inmate Welfare Supplies | N |
| 40 | 01-110-000-0000-6415 | | 170.87 | PARTS FOR BIG EXTRACTOR | 162362 | Operational Supplies | N |
| 41 | 01-110-000-0000-6415 | | 140.40 | PARTS FOR SMALL EXTRACTOR | 162536 | Operational Supplies | N |
| 23 | 01-711-000-0000-6240 | | 49.40 | CONSTANT CONTACT MONTHLY | 1704442092 | Membership/Dues/Association Fees | N |
| 2 | 01-053-000-0000-6360 | | 191.00 | RACARIE SOFTWARE JAN-FEB 2024 | 184007 | Services, Labor, Contracts | N |
| | | | | 01/01/2024 02/01/2024 | | | |
| 32 | 01-200-200-0000-6265 | | 41.67 | BATTERY CHARGER | 40234037 | Programs | N |
| 34 | 01-200-000-0000-6460 | | 50.73 | MOUNTING SCREWS | 47555 | Deputy Supplies | N |
| 31 | 01-040-021-0000-6405 | | 101.34 | DRIVERS MANUALS | 657761 | Office Supplies | N |
| 18 | 01-043-000-0000-6240 | | 105.00 | MAAO RENEWAL - MELISSA B | 7748 | Dues & License Renewal | N |
| 17 | 01-043-000-0000-6240 | | 105.00 | MAAO RENEWAL - SHANNON PARENTE | 7821 | Dues & License Renewal | N |
| 16 | 01-043-000-0000-6240 | | 105.00 | MAAO RENEWAL - STACY WESTERLUN | 7849 | Dues & License Renewal | N |
| 15 | 01-043-000-0000-6240 | | 105.00 | MAAO RENEWAL - KIP STUDAKER | 7852 | Dues & License Renewal | N |
| 5 | 01-122-000-0000-6268 | | 610.00 | INTERMEDIATE SSTS (GRUND) | 790807 | Staff Training, Development | N |
| 12 | 01-043-000-0000-6240 | | 105.00 | MAAO RENEWAL - BEN MOWERS | 7917 | Dues & License Renewal | N |
| 9 | 01-122-000-0000-6268 | | 610.00 | INT-DESIGN (GRUND) | 792017 | Staff Training, Development | N |
| 10 | 01-122-000-0000-6268 | | 610.00 | AD-DESIGN (GRUND) | 792610 | Staff Training, Development | N |
| 19 | 01-043-000-0000-6240 | | 105.00 | MAAO RENEWAL - LORI TIBBETTS | 8116 | Dues & License Renewal | N |
| 1 | 01-049-000-0000-6266 | | 314.18 | NESSUS EXPERT UPGRADE | BKD-73647597595 | Software Fees/License Fees | N |
| 7 | 01-049-000-0000-6266 | | 2,400.00 | LANSWEEPER ANNUAL | BKD-73647710697 | Software Fees/License Fees | N |
| 6 | 01-049-000-0000-6266 | | 0.04 | HCI - MONTHLY FEE | G036495596 | Software Fees/License Fees | N |
| 37 | 01-049-000-0000-6266 | | 99.00 | FLATICON PREMIUM (ANNUAL) | INV-C-2023-4992859 | Software Fees/License Fees | N |
| 20 | 01-043-000-0000-6240 | | 105.00 | MAAO RENEWAL - MIKE D | MIKE-ELAN | Dues & License Renewal | N |
| 21 | 01-043-000-0000-6360 | | 57.00 | MLS MONTHLY FEE | MIKE-ELAN | Services, Labor, Contracts, GIS Mapping | N |
| 22 | 01-043-000-0000-6405 | | 82.92 | REPLACEMENT TAPE FOR MODEL 900 | MIKE-ELAN | Office Supplies | N |
| 36 | 01-200-000-0000-6460 | | 707.20 | QUICK LOCKING SYSTEM KITS | SAF330226 | Deputy Supplies | N |
| **5462** | **Bremer Bank (Elan ACH)** | | **8,779.29** | **32** Transactions | | | |

**1 Fund Total:** **8,779.29** **General Fund** **1 Vendors** **32 Transactions**

Copyright 2010-2022 Integrated Financial Systems

| Vendor No. | Name / Account/Formula | Rpt Accr | Amount | Warrant Description / Service Dates | Invoice # / Paid On Bhf # | Account/Formula Description / On Behalf of Name | 1099 |
|---|---|---|---|---|---|---|---|
| **5462** | **Bremer Bank (Elan ACH)** | | | | | | |
| 13 | 11-939-000-0000-6450 | | 56.50- | RETURN LOGGER'S TAPE WRONG SHI | 492016-00 | Supplies | N |
| 14 | 11-939-000-0000-6450 | | 76.50 | LOGGER'S TAPE | 492016-00 | Supplies | N |
| **5462** | **Bremer Bank (Elan ACH)** | | **20.00** | **2** Transactions | | | |
| **11 Fund Total:** | | | **20.00** | **Forest Development** | **1 Vendors** | **2 Transactions** | |

Copyright 2010-2022 Integrated Financial Systems

| Vendor No. | Name / Account/Formula | Rpt Accr | Amount | Warrant Description / Service Dates | Invoice # / Paid On Bhf # | Account/Formula Description / On Behalf of Name | 1099 |
|---|---|---|---|---|---|---|---|
| **5462** | **Bremer Bank (Elan ACH)** | | | | | | |
| 24 | 19-521-000-0000-6230 | | 141.00 | FALL FUNDRAISER FACEBOOK | ****5416 | Printing, Publishing & Adv | N |
| 28 | 19-521-000-0000-6360 | | 75.00 | QUICKBOOKS SUBSCRIPTION | ****5416 | Services, Labor, Contracts | N |
| 29 | 19-522-000-0000-6240 | | 40.00 | MEMBERSHIP FOR MN HERP. SOCIET | ****5416 | Membership/Dues/Association Fees | N |
| 26 | 19-522-000-0000-6268 | | 75.00 | MN MASTER NATS. RENN | ****5416 | Staff Training, Development | N |
| 27 | 19-522-000-0000-6268 | | 75.00 | MN MASTER NATS JULIA | ****5416 | Staff Training, Development | N |
| 25 | 19-522-000-0000-6430 | | 76.00 | PADS FOR AEDS | ****5416 | Medical Supplies | N |
| 30 | 19-524-000-0000-6590 | | 266.46 | LUMBER FOR PROJECT | ****5416 | Repair & Maintenance Supplies | N |
| **5462** | **Bremer Bank (Elan ACH)** | | **748.46** | **7** Transactions | | | |
| **19 Fund Total:** | | | **748.46** | **Long Lake Conservation Center** | **1 Vendors** | **7 Transactions** | |
| **Final Total:** | | | **9,547.75** | **3 Vendors** | **41 Transactions** | | |

Copyright 2010-2022 Integrated Financial Systems

| Vendor No. | Name / Account/Formula | Rpt Accr | Amount | Warrant Description / Service Dates | Invoice # / Paid On Bhf # | Account/Formula Description / On Behalf of Name | 1099 |
|---|---|---|---|---|---|---|---|
| **5462** | **Bremer Bank (Elan ACH)** | | | | | | |
| 11 | 05-430-700-4800-6405 | | 38.45 | SS-BUSINESS CARDS (KW)<br>01/05/2024 01/05/2024 | | Office Supplies | N |
| 8 | 05-400-400-0402-6266 | | 16.03 | WEBEX (PUBLIC HEALTH)<br>01/09/2024 02/08/2024 | 161-01529722 | Software Fees/License Fees | N |
| 1 | 05-400-440-0410-6266 | | 6.73 | WEBEX (SP, CG, PA)<br>01/09/2024 02/08/2024 | 161-01529722 | Software Fees/License Fees | N |
| 5 | 05-400-440-0410-6266 | | 16.03 | WEBEX (EM)<br>01/09/2024 02/08/2024 | 161-01529722 | Software Fees/License Fees | N |
| 2 | 05-420-600-4800-6266 | | 15.87 | WEBEX (SP, CG, PA)<br>01/09/2024 02/08/2024 | 161-01529722 | Software Fees/License Fees | N |
| 6 | 05-420-600-4800-6266 | | 16.03 | WEBEX (JG)<br>01/09/2024 02/08/2024 | 161-01529722 | Software Fees/License Fees | N |
| 7 | 05-420-640-4800-6266 | | 16.03 | WEBEX (JH)<br>01/09/2024 02/08/2024 | 161-01529722 | Software Fees/License Fees | N |
| 3 | 05-430-700-4800-6266 | | 25.50 | WEBEX (SP, CG, PA)<br>01/09/2024 02/08/2024 | 161-01529722 | Software Fees/License Fees | N |
| 4 | 05-430-700-4800-6266 | | 48.09 | WEBEX (KL, JS, RP)<br>01/09/2024 02/08/2024 | 161-01529722 | Software Fees/License Fees | N |
| 10 | 05-430-700-4800-6266 | | 16.04 | WEBEX (ADULT SERVICES)<br>01/09/2024 02/08/2024 | 161-01529722 | Software Fees/License Fees | N |
| 12 | 05-400-440-0410-6266 | AP | 2.80 | AVAILITY 12/2023<br>12/01/2023 12/31/2023 | INV1071951 | Software Fees/License Fees | N |
| 13 | 05-420-600-4800-6266 | AP | 6.60 | AVAILITY 12/2023<br>12/01/2023 12/31/2023 | INV1071951 | Software Fees/License Fees | N |
| 14 | 05-430-700-4800-6266 | AP | 10.60 | AVAILITY 12/2023<br>12/01/2023 12/31/2023 | INV1071951 | Software Fees/License Fees | N |
| **5462** | **Bremer Bank (Elan ACH)** | | **234.80** | **13** Transactions | | | |
| **5 Fund Total:** | | | **234.80** | **Health & Human Services** | **1 Vendors** | **13 Transactions** | |

Copyright 2010-2022 Integrated Financial Systems

| Vendor No. | Name / Account/Formula | Rpt Accr | Amount | Warrant Description / Service Dates | Invoice # / Paid On Bhf # | Account/Formula Description / On Behalf of Name | 1099 |
|---|---|---|---|---|---|---|---|
| **5462** | **Bremer Bank (Elan ACH)** | | | | | | |
| 9 | 25-000-000-0000-6266 | | 16.03 | WEBEX (OPIOID)<br>01/09/2024 02/08/2024 | 161-01529722 | Data Processing/Computer Services | N |
| **5462** | **Bremer Bank (Elan ACH)** | | **16.03** | **1** Transactions | | | |
| **25 Fund Total:** | | | **16.03** | **Opioid Settlement** | **1 Vendors** | **1 Transactions** | |
| **Final Total:** | | | **250.83** | **2 Vendors** | **14 Transactions** | | |

Copyright 2010-2022 Integrated Financial Systems

| Vendor No. | Name / Account/Formula | Rpt Accr | Amount | Warrant Description / Service Dates | Invoice # / Paid On Bhf # | Account/Formula Description / On Behalf of Name | 1099 |
|---|---|---|---|---|---|---|---|
| **5462** | **Bremer Bank (Elan ACH)** | | | | | | |
| 1 | 03-301-000-0000-6240 | | 120.00 | NOTARY - C JOHNSON | ELAN STMT 01-12-2 | Membership/Dues/Association Fees | N |
| 3 | 03-301-000-0000-6241 | | 225.00 | CONFERECE REGISTRATION | ELAN STMT 01-12-2 | Meeting/Conference Registration Fee | N |
| 4 | 03-301-000-0000-6241 | | 94.96 | MCEA CONFERENCE MEALS | ELAN STMT 01-12-2 | Meeting/Conference Registration Fee | N |
| 2 | 03-301-000-0000-6405 | | 66.63 | OFFICE SUPPLIES | ELAN STMT 01-12-2 | Office Supplies | N |
| 5 | 03-303-000-0000-6268 | | 90.00 | HEATING/VENT/AIR COND RETEST | ELAN STMT 01-12-2 | Staff Training, Development | N |
| **5462** | **Bremer Bank (Elan ACH)** | | **596.59** | **5** Transactions | | | |
| **3 Fund Total:** | | | **596.59** | **Road & Bridge** | **1 Vendors** | **5 Transactions** | |
| **Final Total:** | | | **596.59** | **1 Vendors** | **5 Transactions** | | |

Copyright 2010-2022 Integrated Financial Systems

| Recap by Fund | Fund | AMOUNT | Name |
|---|---|---|---|
| | 1 | 8,779.29 | General Fund |
| | 11 | 20.00 | Forest Development |
| | 19 | 748.46 | Long Lake Conservation Center |
| | All Funds | 9,547.75 | Total |

Approved by, . . . . . .

. . . . . .

. . . . . .

Copyright 2010-2022 Integrated Financial Systems

| Recap by Fund | Fund | AMOUNT | Name |
|---|---|---|---|
| | 5 | 234.80 | Health & Human Services |
| | 25 | 16.03 | Opioid Settlement |
| | All Funds | 250.83 | Total |

Approved by, . . . . . .

. . . . . .

. . . . . .

Copyright 2010-2022 Integrated Financial Systems

| Recap by Fund | Fund | AMOUNT | Name |
|---|---|---|---|
| | 3 | 596.59 | Road & Bridge |
| | All Funds | 596.59 | Total |

Approved by, . . . . . .

. . . . . .

. . . . . .

Total Elan paid 1.18.24 = $10,395.17

Copyright 2010-2022 Integrated Financial Systems

# Board of County Commissioners Agenda Request

**2S**
Agenda Item #

**Requested Meeting Date:** February 13, 2024

**Title of Item:** Affidavit for Duplicate of Lost Warrant - Lamke

| | | |
|---|---|---|
| ☐ REGULAR AGENDA | **Action Requested:** | ☐ Direction Requested |
| ☑ CONSENT AGENDA | ☑ Approve/Deny Motion | ☐ Discussion Item |
| ☐ INFORMATION ONLY | ☐ Adopt Resolution (attach draft) | ☐ Hold Public Hearing* |
| | | **provide copy of hearing notice that was published* |

| | |
|---|---|
| **Submitted by:** Wendie Bright | **Department:** Auditor's Office |
| **Presenter (Name and Title):** N/A | **Estimated Time Needed:** N/A |

**Summary of Issue:**

Approve Affidavit for Duplicate of Lost Municipal Order or Warrant:
Warrant #91049 - Tina Turnock - July 7, 2023 - $76.95

**Alternatives, Options, Effects on Others/Comments:**

**Recommended Action/Motion:**

Approve Affidavit for Duplicate of Lost Municipal Order or Warrant:
Warrant #91049 - Tina Turnock - July 7, 2023 - $76.95
Warrant to be reissued to Tina Lamke (married name)

**Financial Impact:**

*Is there a cost associated with this request?* ☐ *Yes* ☑ *No*
*What is the total cost, with tax and shipping? $*
*Is this budgeted?* ☐ *Yes* ☐ *No* *Please Explain:*

Legally binding agreements must have County Attorney approval prior to submission.

Affidavit for Duplicate of Lost Municipal Order or Warrant

STATE OF MINNESOTA,

County of Aitkin ) ) ss. Tina Lamke )

being duly sworn on oath says, that (s)he is the owner of a certain commissioner warrant,

dated the 7th day of July, 2023, numbered 91049,

issued by Aitkin County to Tina Turnock,

in the sum of $76.95 has been lost in the manner
("Lost" or "Destroyed")

following, to wit:

and that (s)he makes this affidavit for the purpose of having a duplicate thereof issued to him (her) according to law, and to that end herewith files his (her) indemnifying bond, with sureties to be approved, in the sum equal to double the amount of said commissioner warrant.

x Tina Lamke

Subscribed and sworn to before me this 30 day of January, ~~2023~~ 2024

Mary L. Hakes

MARY L. HAKES
NOTARY PUBLIC-MINNESOTA
My Comm. Exp. Jan. 31, 2026

Notary Public _____ County, Minnesota

My Commission Expires _____

# Aitkin County

INTEGRATED FINANCIAL SYSTEMS

**2T**

Audit List for Board **MANUAL WARRANTS/VOIDS/CORRECTIONS**



| | | |
|---|---|---|
| Print List in Order By: | 1 | 1 - Fund (Page Break by Fund)<br>2 - Department (Totals by Dept)<br>3 - Vendor Number<br>4 - Vendor Name |
| Explode Dist. Formulas?: | Y | |
| Paid on Behalf Of Name on Audit List?: | N | |
| Type of Audit List: | D | D - Detailed Audit List<br>S - Condensed Audit List |
| Save Report Options?: | N | |

| Vendor No. | Name / Account/Formula | Rpt Accr | Amount | Warrant Description / Service Dates | Invoice # / Paid On Bhf # | Account/Formula Description / On Behalf of Name | 1099 |
|---|---|---|---|---|---|---|---|
| **8410** | **Bremer Bank** | | | | | | |
| 1 | 01-044-904-0000-6360 | | 6.02 | MED FSA CLAIMS 2023 | 01/25/2024 | Flex Plan Withdrawals | N |
| 2 | 01-044-904-0000-6360 | | 33.29 | MED FSA CLAIMS 2023 | 01/28/2024 | Flex Plan Withdrawals | N |
| **8410** | **Bremer Bank** | | **39.31** | **2** Transactions | | | |
| **1 Fund Total:** | | | **39.31** | **General Fund** | **1 Vendors** | **2 Transactions** | |
| **Final Total:** | | | **39.31** | **1 Vendors** | **2 Transactions** | | |

Copyright 2010-2022 Integrated Financial Systems

| Recap by Fund | Fund | AMOUNT | Name |
|---|---|---|---|
| | 1 | 39.31 | General Fund |
| | All Funds | 39.31 | Total |

Approved by, . . . . . .

. . . . . .

. . . . . .

Copyright 2010-2022 Integrated Financial Systems

# Board of County Commissioners Agenda Request

**2U**
Agenda Item #

**Requested Meeting Date:** February 13, 2024

**Title of Item:** 2023 Annual Apportionment Percentages of Forfeited Tax Sales

| | | |
|---|---|---|
| ☐ REGULAR AGENDA | **Action Requested:** | ☐ Direction Requested |
| ☑ CONSENT AGENDA | ☐ Approve/Deny Motion | ☐ Discussion Item |
| ☐ INFORMATION ONLY | ☑ Adopt Resolution (attach draft) | ☐ Hold Public Hearing* |
| | | **provide copy of hearing notice that was published* |

| | |
|---|---|
| **Submitted by:** Dennis (DJ) Thompson | **Department:** Land |
| **Presenter (Name and Title):** Dennis (DJ) Thompson, Land Commissioner | **Estimated Time Needed:** NA |

**Summary of Issue:**

The attached annual resolution directs funding of the County Land Department and County Parks and Trails using 2023 forfeited tax sale apportionment per MS 282.08.

**Alternatives, Options, Effects on Others/Comments:**

**Recommended Action/Motion:**

Adopt resolution setting percentage of tax forfeited receipts to be used for forest development and parks and trails.

**Financial Impact:**

*Is there a cost associated with this request?* ☐ *Yes* ☑ *No*

*What is the total cost, with tax and shipping? $*

*Is this budgeted?* ☐ *Yes* ☐ *No* *Please Explain:*

Legally binding agreements must have County Attorney approval prior to submission.

**CERTIFIED COPY OF RESOLUTION OF COUNTY BOARD OF AITKIN COUNTY, MINNESOTA**

ADOPTED February 13, 2024

By Commissioner: xxx **20240213-xxx**

## Apportionment of 2023 Tax-Forfeited Funds

**WHEREAS**, pursuant to Minnesota Statute 282.08, County boards are authorized to set aside monies from the tax forfeited sale fund for timber and park development.

**NOW, THEREFORE, BE IT RESOLVED**, that in compliance with said law, the County Board set aside thirty (30) percent of the remaining receipts to be used for forest development and twenty (20) percent of these receipts remaining are to be used for the maintenance and development of county parks or recreational areas, as defined in Minnesota Statute Section 398.31 to 398.36 to be expended under the supervision of the County Board.

Commissioner xxx moved the adoption of the resolution and it was declared adopted upon the following vote

FIVE MEMBERS PRESENT All Members Voting xxx

**STATE OF MINNESOTA}**
**COUNTY OF AITKIN}**

I, Jessica Seibert, County Administrator, Aitkin County, Minnesota do hereby certify that I have compared the foregoing with the original resolution filed in the Administration Office of Aitkin County in Aitkin, Minnesota as stated in the minutes of the proceedings of said Board on the 13th day of February 2024, and that the same is a true and correct copy of the whole thereof.

**Witness my hand and seal this 13th day of February 2024**

_____

Jessica Seibert
County Administrator

# Board of County Commissioners Agenda Request

**2V**
Agenda Item #

**Requested Meeting Date:** February 13, 2024

**Title of Item:** Revised Raiche Easement

| | |
|---|---|
| ☐ REGULAR AGENDA<br>☑ CONSENT AGENDA<br>☐ INFORMATION ONLY | **Action Requested:**<br>☑ Approve/Deny Motion<br>☐ Adopt Resolution (attach draft)<br>☐ Direction Requested<br>☐ Discussion Item<br>☐ Hold Public Hearing*<br>**provide copy of hearing notice that was published* |

| | |
|---|---|
| **Submitted by:**<br>Dennis (DJ) Thompson | **Department:**<br>Land |
| **Presenter (Name and Title):**<br>Dennis (DJ) Thompson, Land Commissioner | **Estimated Time Needed:**<br>NA |

**Summary of Issue:**

In 2012, an easement was granted to the Aitkin County Land Department by Kevin and Brenda Raiche. The easement is for timber management purposes. The landowners would like the easement to be relocated to avoid the main recreation area on the property. New language has been drafted that establishes the location of a new easement and voids the old easement. The County Surveyor has reviewed the revised easement language.

**Alternatives, Options, Effects on Others/Comments:**

**Recommended Action/Motion:**
Pass a motion approving the revised easement.

**Financial Impact:**
*Is there a cost associated with this request?* ☐ *Yes* ☑ *No*
*What is the total cost, with tax and shipping? $*
*Is this budgeted?* ☐ *Yes* ☐ *No* *Please Explain:*

Legally binding agreements must have County Attorney approval prior to submission.

EASEMENT:

KEVIN E. RAICHE and BRENDA A. RAICHE, as Trustees of THE RAICHE LIVING TRUST DATED MAY 22, 2008, Grantors, hereby convey to State of Minnesota, in trust for the taxing districts, a political subdivision under the laws of the State of Minnesota, Grantee, a perpetual easement over and across the hereinafter described land for management purposes.

A 33.00 foot wide easement for ingress and egress for management purposes lying over and across that part of the North Half of the Northwest Quarter (N1/2-NW1/4), Section 4, Township 44, Range 24, Aitkin County, Minnesota, which lies 16.50 feet on each side of the following described line:
Commencing at the northeast corner of said N1/2-NW1/4, thence North 89 degrees 09 minutes 30 seconds West, assuming that the north line of the Northeast Quarter, said Section 4, bears South 89 degrees 38 minutes 53 seconds East from said point of commencement, 773.18 feet to the point of beginning of the line to be described: thence South 03 degrees 31 minutes 37 seconds West 109.53 feet; thence South 09 degrees 05 minutes 14 seconds East 18.01 feet; thence South 24 degrees 42 minutes 04 seconds East 48.54 feet; thence South 03 degrees 05 minutes 46 seconds East 263.06 feet; thence South 23 degrees 42 minutes 23 seconds West 314.17 feet; thence South 16 degrees 24 minutes 08 seconds West 100.98 feet; thence South 04 degrees 10 minutes 13 seconds West 57.15 feet; thence South 57 degrees 45 minutes 14 seconds West 128.62 feet; thence South 84 degrees 59 minutes 45 seconds West 118.90 feet; thence South 53 degrees 06 minutes 03 seconds West 146.56 feet; thence South 26 degrees 17 minutes 57 seconds West 215.09 feet; thence South 21 degrees 12 minutes 19 seconds East 150.00 feet and said line there terminating.

The sidelines of said easement are to be lengthened or shortened to begin at the north line of said N1/2-NW1/4 and to terminate at the south line of said N1/2-NW1/4.

By the execution and delivery by the Grantors and the acceptance and recording by the Grantees the easement contained herein replaces in its entirety the easement heretofore granted by the Grantors to the Grantees in that certain Easement dated September 21, 2012 and filed October 11, 2012 as Document 413899 in the office of the Aitkin County Recorder which said prior Easement is revoked and terminated and no longer of any effect.

Dated at Aitkin, Minnesota this 18th day of January, 2024.

_____
Kevin E. Raiche, Trustee

_____
Brenda A. Raiche, Trustee

State of Minnesota
County of Aitkin

The foregoing instrument was acknowledged before me this ____ day of _____, 2024, by KEVIN E. RAICHE and BRENDA A. RAICHE, as Trustees of THE RAICHE LIVING TRUST DATED MAY 22, 2008, Grantors.

_____
Notary Public
My Commission Expires: _____

This instrument was drafted by:
Dennis Thompson, Land Commissioner
502 Minnesota Ave N
Aitkin MN 56431

# Sketch And Description

PART OF THE NORTH HALF OF THE NORTHWEST QUARTER,
SECTION 4, TOWNSHIP 44, RANGE 24,
AITKIN COUNTY, MINNESOTA

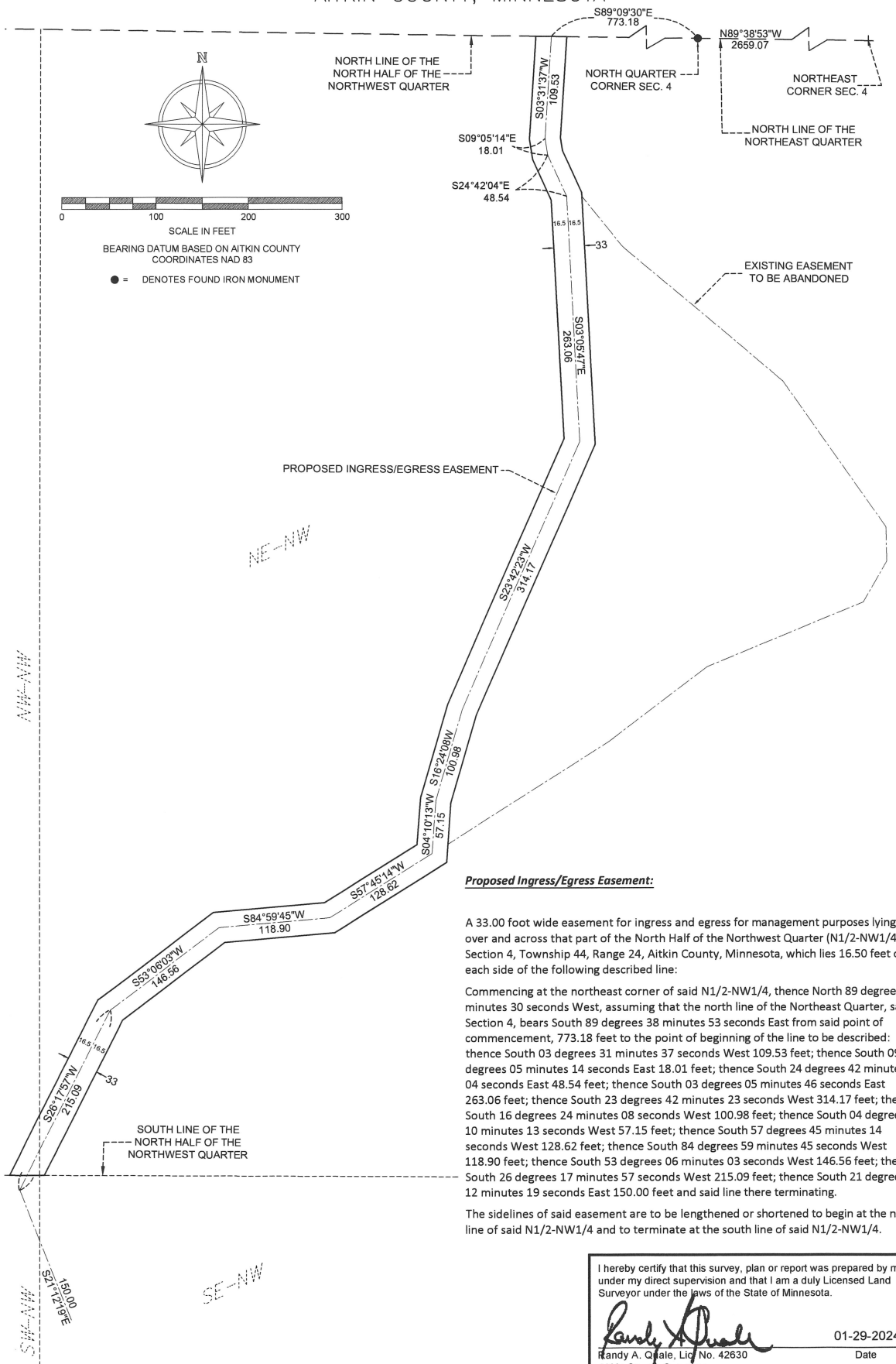


***Proposed Ingress/Egress Easement:***

A 33.00 foot wide easement for ingress and egress for management purposes lying over and across that part of the North Half of the Northwest Quarter (N1/2-NW1/4), Section 4, Township 44, Range 24, Aitkin County, Minnesota, which lies 16.50 feet on each side of the following described line:

Commencing at the northeast corner of said N1/2-NW1/4, thence North 89 degrees 09 minutes 30 seconds West, assuming that the north line of the Northeast Quarter, said Section 4, bears South 89 degrees 38 minutes 53 seconds East from said point of commencement, 773.18 feet to the point of beginning of the line to be described: thence South 03 degrees 31 minutes 37 seconds West 109.53 feet; thence South 09 degrees 05 minutes 14 seconds East 18.01 feet; thence South 24 degrees 42 minutes 04 seconds East 48.54 feet; thence South 03 degrees 05 minutes 46 seconds East 263.06 feet; thence South 23 degrees 42 minutes 23 seconds West 314.17 feet; thence South 16 degrees 24 minutes 08 seconds West 100.98 feet; thence South 04 degrees 10 minutes 13 seconds West 57.15 feet; thence South 57 degrees 45 minutes 14 seconds West 128.62 feet; thence South 84 degrees 59 minutes 45 seconds West 118.90 feet; thence South 53 degrees 06 minutes 03 seconds West 146.56 feet; thence South 26 degrees 17 minutes 57 seconds West 215.09 feet; thence South 21 degrees 12 minutes 19 seconds East 150.00 feet and said line there terminating.

The sidelines of said easement are to be lengthened or shortened to begin at the north line of said N1/2-NW1/4 and to terminate at the south line of said N1/2-NW1/4.

I hereby certify that this survey, plan or report was prepared by me or under my direct supervision and that I am a duly Licensed Land Surveyor under the laws of the State of Minnesota.

Randy A. Quale, Lic. No. 42630
Aitkin County Surveyor

01-29-2024
Date

# Board of County Commissioners Agenda Request

**2W**
Agenda Item #

**Requested Meeting Date:** February 13, 2024

**Title of Item:** Consumption & Display Permits - Melaas, LuRae L dba 202 Tavern

| | | |
|---|---|---|
| ☐ REGULAR AGENDA<br>☑ CONSENT AGENDA<br>☐ INFORMATION ONLY | **Action Requested:**<br>☑ Approve/Deny Motion<br>☐ Adopt Resolution (attach draft) | ☐ Direction Requested<br>☐ Discussion Item<br>☐ Hold Public Hearing*<br>**provide copy of hearing notice that was published* |

| | |
|---|---|
| **Submitted by:**<br>Christy M. Bishop | **Department:**<br>Auditor's Office |
| **Presenter (Name and Title):**<br>n/a | **Estimated Time Needed:**<br>n/a |

**Summary of Issue:**

Application for Consumption and Display Permit : Melaas, LuRae L dba 202 Tavern located at 49482 202nd Place McGregor, MN 55760

**Alternatives, Options, Effects on Others/Comments:**

**Recommended Action/Motion:**
Motion to approve Application for Consumption and Display Permit: Melaas, LuRae L dba 202 Tavern

**Financial Impact:**
*Is there a cost associated with this request?* ☐ *Yes* ☑ *No*
*What is the total cost, with tax and shipping? $*
*Is this budgeted?* ☐ *Yes* ☑ *No* *Please Explain:*

Legally binding agreements must have County Attorney approval prior to submission.

# Board of County Commissioners Agenda Request

**2X**
Agenda Item #

**Requested Meeting Date:** February 13, 2024

**Title of Item:** Revitalization Grant: Award funding

| | | |
|---|---|---|
| ☐ REGULAR AGENDA | **Action Requested:** | ☐ Direction Requested |
| ☑ CONSENT AGENDA | ☑ Approve/Deny Motion | ☐ Discussion Item Hold |
| ☐ INFORMATION ONLY | ☐ Adopt Resolution (attach draft) | ☐ Public Hearing* |
| | **provide copy of hearing notice that was published* | |

| | |
|---|---|
| **Submitted by:** Mark Jeffers | **Department:** Administration |
| **Presenter (Name and Title):** | **Estimated Time Needed:** |

**Summary of Issue:**

On December 13, 2022, the Aitkin County Board of Commissioners approved to allocate $40,000 from the ARPA Fiscal Recovery Fund to the Business Development & Recreation Fund.

In May of 2023, the funds were transferred from the ARPA funds (fund 22) to the Business Development Fund line item (02-700-909).

ARPA funding (fund 22) does not need to be reserved at the end of the year. The $40,000 that was transferred needed to be reserved and was inadvertently not requested at year end.

Economic Development is requesting approval to transfer the $40,000 balance from fund 01 ED 700-909 to Fund 02-700-909, thus placing it back in the Business Development and Recreation Fund line item.

**Alternatives, Options, Effects on Others/Comments:**

**Recommended Action/Motion:**

Economic Development requests approval of a motion to transfer the $40,000 balance from fund 01 ED 700-909 to Fund 02-700-909.

**Financial Impact:**

*Is there a cost associated with this request?* ☐ *Yes* ☑ *No*

*What is the total cost, with tax and shipping? $*

*Is this budgeted?* ☐ *Yes* ☐ *No* *Please Explain:*

Legally binding agreements must have County Attorney approval prior to submission.

# Aitkin County

Audit List for Board **AUDITOR'S VOUCHERS ENTRIES**



Print List in Order By: 2
1 - Fund (Page Break by Fund)
2 - Department (Totals by Dept)
3 - Vendor Number
4 - Vendor Name

Page Break By: 1
1 - Page Break by Fund
2 - Page Break by Dept

Explode Dist. Formulas?: N

Paid on Behalf Of Name on Audit List?: N

Type of Audit List: D
D - Detailed Audit List
S - Condensed Audit List

Save Report Options?: N

| Vendor No. | Name / Account/Formula | Accr | Rpt | Amount | Warrant Description / Service Dates | Invoice # / Paid On Bhf # | Account/Formula Description / On Behalf of Name | 1099 |
|---|---|---|---|---|---|---|---|---|
| **308** | DEPT | | | | R&B Equipment & Facilities | | | |
| 9506 | **NORTH COUNTRY CHEVROLET BUICK GM(** | | | | | | | |
| | 03-308-000-0000-6610 | AP | P | 48,698.38 | 2024 CHEVY SILVERADO 3500 | 1GB4WRE73RF318 | Equipment | N |
| **9506** | **NORTH COUNTRY CHEVROLET BUICK GM(** | | | **48,698.38** | **1** Transactions | | | |
| **308** | **DEPT Total:** | | | **48,698.38** | **R&B Equipment & Facilities** | **1 Vendors** | **1 Transactions** | |
| **3** | **Fund Total:** | | | **48,698.38** | **Road & Bridge** | | **1 Transactions** | |
| | **Final Total:** | | | **48,698.38** | **1 Vendors** | **1 Transactions** | | |

Copyright 2010-2022 Integrated Financial Systems

# Aitkin County

Audit List for Board **AUDITOR'S VOUCHERS ENTRIES**



| Recap by Fund | Fund | AMOUNT | Name |
|---|---|---|---|
| | 3 | 48,698.38 | Road & Bridge |
| | All Funds | 48,698.38 | Total |

Approved by, . . . . . .

. . . . . .

. . . . . .

Copyright 2010-2022 Integrated Financial Systems

# Board of County Commissioners Agenda Request

**2Z**
Agenda Item #

**Requested Meeting Date:** February 13, 2024

**Title of Item:** Fire Protection Contract

| | | |
|---|---|---|
| ☐ REGULAR AGENDA | **Action Requested:** | ☐ Direction Requested |
| ☑ CONSENT AGENDA | ☑ Approve/Deny Motion | ☐ Discussion Item |
| ☐ INFORMATION ONLY | ☐ Adopt Resolution (attach draft) | ☐ Hold Public Hearing* |
| | **provide copy of hearing notice that was published* | |

| | |
|---|---|
| **Submitted by:** Kirk Peysar, County Auditor | **Department:** County Auditor |
| **Presenter (Name and Title):** Kirk Peysar, County Auditor | **Estimated Time Needed:** n/a |

**Summary of Issue:**

Approve and authorize signatures to the 2,024 Fire Protection Contract for the Unorganized Town of 45-24 with the City of McGrath Fire Department.

**Alternatives, Options, Effects on Others/Comments:**

**Recommended Action/Motion:**
Approve and authorize signatures to the contracts with City of McGrathFire Department.

**Financial Impact:**
*Is there a cost associated with this request?* ☑ *Yes* ☐ *No*
*What is the total cost, with tax and shipping? $* as attached
*Is this budgeted?* ☑ *Yes* ☐ *No* *Please Explain:*

Legally binding agreements must have County Attorney approval prior to submission.

**Kirk Peysar**
**Aitkin County Auditor**
209 Second Street Northwest Room 202
Aitkin, Minnesota 56431
218.927.7354

February 2, 2024

To: Board of Commissioners

From: Kirk Peysar, County Auditor

Re: 2024 Fire Protection contract with City of McGrath

City of McGrath has submitted a renewal contract to provide fire protection to the unorganized township 45-24 (Jewett). The allocation of fire protection cost is as follows:
45-24 $735.00

Request to authorize signatures to the 2024 Fire Protection contract with City of McGrath Township for the unorganized township.

CONTRACT FOR TOWNSHIP FIRE PROTECTION

This agreement, made and entered into this 1ST day of Jan 2024 by and between the City of McGrath, Aitkin County, Minnesota and the township of Unorg 45/24, Aitkin County, Minnesota.

Whereas, the second party, deeming it advisable to have available for the benefit of the residents of said Township, services of the McGrath Fire Department and electors of Township have pursuant to law, provided a fund for furnishing of such services and

Whereas, City by appropriate action authorized it's Mayor and Clerk to enter into contract with Township.

Now, therefore; it is mutually agreed between parties, that for a period of 1 year from and after the date hereof, the Fire Department of McGrath will answer any and all fire calls of the residents in the following sections 1-36 of Township and will respond to such calls with suitable firefighting apparatus to render all assistance possible in the saving of life and property. In the event of two calls, the first call shall have priority and the second call shall be answered as soon as possible, it being understood that McGrath has other contracts, and it being further understood that the property within City limits shall have first call on the services of the Fire Department.

In consideration of such services, second party agrees to pay the sum of $735.00, payable in advance.

It is understood and agreed however that in the event that the road and weather conditions be such that the fire run cannot be made with reasonable safety to men and equipment, the decision of the Fire Chief or other Fire Department official being final in such event, that said City shall not be liable in any way to Township, or to any person, firm or corporation for failure of the department to attend a fire or to extinguish a fire or for damage to or loss of goods.

In consideration of such services, parties served agreed to pay $350.00 per fire run.

It is understood and agreed that this contract shall continue in effect for a period of not more than 1 year with the privilege of cancelling by either party with a written notice within thirty days.

CONTRACT DATE Jan 1 2024 to Dec 31 2024

In witness thereof, the respective parties have caused this instrument to be executed by the respective officers thereof.

| | |
|---|---|
| CITY OF MCGRATH | TOWNSHIP |
| _____ | _____ |
| MAYOR | CHAIRMAN |
| _____ | _____ |
| CLERK | CLERK |

# Board of County Commissioners Agenda Request

**2AA**
Agenda Item #

**Requested Meeting Date:** February 13, 2024

**Title of Item:** 2023 Annual Apportionment of Forfeited Tax Sales

| | |
|---|---|
| ☐ REGULAR AGENDA<br>☑ CONSENT AGENDA<br>☐ INFORMATION ONLY | **Action Requested:**<br>☐ Approve/Deny Motion<br>☑ Adopt Resolution (attach draft)<br>☐ Direction Requested<br>☐ Discussion Item<br>☐ Hold Public Hearing*<br>**provide copy of hearing notice that was published* |

| | |
|---|---|
| **Submitted by:**<br>Dennis (DJ) Thompson | **Department:**<br>Land |
| **Presenter (Name and Title):**<br>Dennis (DJ) Thompson, Land Commissioner | **Estimated Time Needed:**<br>NA |

**Summary of Issue:**

The attached resolution enables disbursement of forfeited tax sales per MS 282.08 - 282.09 and approved in the 2023 budget.

**Alternatives, Options, Effects on Others/Comments:**

**Recommended Action/Motion:**

Adopt resolution for disbursement of forfeited tax sales to Auditor and gravel pit account.

**Financial Impact:**

*Is there a cost associated with this request?* ☑ *Yes* ☐ *No*

*What is the total cost, with tax and shipping?* $ 30,259.50

*Is this budgeted?* ☑ *Yes* ☐ *No* *Please Explain:*

Legally binding agreements must have County Attorney approval prior to submission.

**CERTIFIED COPY OF RESOLUTION OF COUNTY BOARD OF AITKIN COUNTY, MINNESOTA**

ADOPTED February 13, 2024

By Commissioner: xxx **20240213-xxx**

## Transfer of 2023 Tax-Forfeited Funds

**WHEREAS**, according to M.S. 282.09, Subdivision 1, the County Board does hereby determine that the $0.50 fee from each certificate of sale, contract for deed, and each lease executed by the Auditor and the compensation for clerical help on tax-forfeited land matters in the County Auditor's office during the 2023 calendar year was $30,000, and

**WHEREAS**, a gravel pit rehabilitation account has been established, and $0.15 per yard of gravel taken out of county pits will be placed in this account, the 2023 amount to be placed in this account is $259.50,

**NOW THEREFORE, BE IT RESOLVED**, that the amount of:

$30,000 be transferred from the Forfeited Tax Sales Account (10-923-6900) to the County Auditor account (01-040-5590), AND

$259.50 shall be transferred from the Forfeited Tax Sales Account (10-923-6900) to the Gravel Pit Account (11-936-5252).

Commissioner xxx moved the adoption of the resolution and it was declared adopted upon the following vote

FIVE MEMBERS PRESENT All Members Voting xxx

**STATE OF MINNESOTA}**
**COUNTY OF AITKIN}**

I, Jessica Seibert, County Administrator, Aitkin County, Minnesota do hereby certify that I have compared the foregoing with the original resolution filed in the Administration Office of Aitkin County in Aitkin, Minnesota as stated in the minutes of the proceedings of said Board on the 13th day of February 2024, and that the same is a true and correct copy of the whole thereof.

**Witness my hand and seal this 13th day of February 2024**

_____

Jessica Seibert
County Administrator

# Board of County Commissioners Agenda Request

**2AB**
Agenda Item #

**Requested Meeting Date:** 2-13-24

**Title of Item:** Equipment Purchase - Pickup Truck

| | | |
|---|---|---|
| ☐ REGULAR AGENDA | **Action Requested:** | ☐ Direction Requested |
| ☑ CONSENT AGENDA | ☑ Approve/Deny Motion | ☐ Discussion Item |
| ☐ INFORMATION ONLY | ☐ Adopt Resolution (attach draft) | ☐ Hold Public Hearing* |
| | | **provide copy of hearing notice that was published* |

| | |
|---|---|
| **Submitted by:** John Welle | **Department:** Highway Department |
| **Presenter (Name and Title):** NA | **Estimated Time Needed:** NA |

**Summary of Issue:**

Replacement of Unit 472 is listed in the 2024 Capital Equipment Replacement Program for a total cost of $50,000. . Quotes were received as follows:

Aitkin Motor Company - Aitkin, MN - 2024 Ford F150 Crew 4WD XLT - $50,248
North Country GM - Hibbing, MN - 2024 GMC 1500 Crew 4WD Pro - $50,508.75

**Alternatives, Options, Effects on Others/Comments:**

**Recommended Action/Motion:**

Recommend motion to purchase 2024 Ford F150 from Aitkin Motor Company, Aitkin, MN for $50,248 + sales tax and fees.

**Financial Impact:**

*Is there a cost associated with this request?* ☑ *Yes* ☐ *No*

*What is the total cost, with tax and shipping?* $ 50,248 plus sales tax and fees

*Is this budgeted?* ☑ *Yes* ☐ *No* *Please Explain:*

$50,000 was budgeted in the 2024 Capital Equipment Program for this purchase.

Legally binding agreements must have County Attorney approval prior to submission.

# Board of County Commissioners Agenda Request

**2AC**
Agenda Item #

**Requested Meeting Date:** 2-13-24

**Title of Item:** Equipment Purchase - Pickup Truck with Survey Box Insert

| | |
|---|---|
| ☐ REGULAR AGENDA<br>☑ CONSENT AGENDA<br>☐ INFORMATION ONLY | **Action Requested:**<br>☑ Approve/Deny Motion<br>☐ Adopt Resolution (attach draft)<br>☐ Direction Requested<br>☐ Discussion Item<br>☐ Hold Public Hearing*<br>**provide copy of hearing notice that was published* |

| | |
|---|---|
| **Submitted by:**<br>John Welle | **Department:**<br>Highway Department |
| **Presenter (Name and Title):**<br>NA | **Estimated Time Needed:**<br>NA |

**Summary of Issue:**

See attached summary.

**Alternatives, Options, Effects on Others/Comments:**

**Recommended Action/Motion:**
Recommend purchase of 2024 GMC 1500 from North Country GM, Hibbing, MN for $46,952.35.
Recommend purchase of Survey box insert from Highway Products, Inc, White City, for $12,618.46.
Additional sales tax will apply to both purchases.

**Financial Impact:**
*Is there a cost associated with this request?* ☑ *Yes* ☐ *No*
*What is the total cost, with tax and shipping? $* $59,570.81 plus sales tax and fees
*Is this budgeted?* ☑ *Yes* ☐ *No* *Please Explain:*

$65,000 was budgeted in the 2024 Capital Equipment Program for this purchase.

Legally binding agreements must have County Attorney approval prior to submission.

# Attachment
# for
# Equipment Purchase – Pickup Truck with Survey Box Insert

Replacement of Unit 460 is listed in the 2024 Capital Equipment Replacement Program for a total cost of $65,000. The complete acquisition includes two components: the purchase of a 1/2-ton four wheel drive pickup truck and the purchase of a survey box insert. Quotes were received as follows:

1. Purchase of 1/2-ton four wheel drive Pickup Truck

| | **Aitkin Motor Company**<br>**Aitkin, MN** | **North Country GM**<br>**Hibbing, MN** |
|---|---|---|
| **Make/Model** | 2024 Ford F-150 Crew, 4WD | 2024 GMC 1500 Crew, 4WD |
| **Cost** | $51,200 | $46,952.35 |

2. Purchase of Survey Box Insert

| | **Bert's Truck Equipment**<br>**MoorHead, MN** | **Highway Products, Inc**<br>**White City, OR** |
|---|---|---|
| **Cost** | $23,125 | $12,618.46 |

# Board of County Commissioners
# Agenda Request

**2AD**
Agenda Item #

**Requested Meeting Date:** February 13, 2024

**Title of Item:** Affidavit for Duplicate of Lost Warrant - Snyder

| | | |
|---|---|---|
| ☐ REGULAR AGENDA | **Action Requested:** | ☐ Direction Requested |
| ☑ CONSENT AGENDA | ☑ Approve/Deny Motion | ☐ Discussion Item |
| ☐ INFORMATION ONLY | ☐ Adopt Resolution (attach draft) | ☐ Hold Public Hearing* |
| | | **provide copy of hearing notice that was published* |

| | |
|---|---|
| **Submitted by:** Wendie Bright | **Department:** Auditor's Office |
| **Presenter (Name and Title):** N/A | **Estimated Time Needed:** N/A |

**Summary of Issue:**

Approve Affidavit for Duplicate of Lost Municipal Order or Warrant:
Warrant #88523 - Tara Snyder - July 22, 2022 - $39.48

**Alternatives, Options, Effects on Others/Comments:**

**Recommended Action/Motion:**

Approve Affidavit for Duplicate of Lost Municipal Order or Warrant:
Warrant #88523 - Tara Snyder - July 22, 2022 - $39.48

**Financial Impact:**

*Is there a cost associated with this request?* ☐ *Yes* ☑ *No*

*What is the total cost, with tax and shipping? $*

*Is this budgeted?* ☐ *Yes* ☐ *No* *Please Explain:*

Legally binding agreements must have County Attorney approval prior to submission.

Affidavit for Duplicate of Lost Municipal Order or Warrant

STATE OF MINNESOTA,

County of Aitkin ) ss. ***Tara Snyder***

being duly sworn on oath says, that (s)he is the owner of a certain commissioner warrant,

dated the ***22nd*** day of ***July*** , ***2022*** numbered ***88523*** ,

issued by Aitkin County to ***Tara Snyder*** ,

in the sum of ***$39.48*** , has been ***Lost*** in the manner

*(lost or destroyed)*

following, to wit:

Never received.

and that (s)he makes this affidavit for the purpose of having a duplicate thereof issued to him (her) according to law, and to that end herewith files his (her) indemnifying bond, with sureties to be approved, in the sum equal to double the amount of said commissioner warrant.

x Tara Snyder

Subscribed and sworn to before me this 5 day of Feb, 2024

Kay E. Olson

Notary Public Aitkin County, Minnesota

My Commission Expires 01/31/2027

KAY ELIZABETH OLSON
NOTARY PUBLIC
MINNESOTA
My Commission Expires Jan. 31, 2027

# Board of County Commissioners
# Agenda Request

**2AE**
Agenda Item #

**Requested Meeting Date:** February 13, 2024

**Title of Item:** Affidavit for Duplicate of Lost Warrant - Mindrum

| | | |
|---|---|---|
| ☐ REGULAR AGENDA | **Action Requested:** | ☐ Direction Requested |
| ☑ CONSENT AGENDA | ☑ Approve/Deny Motion | ☐ Discussion Item |
| ☐ INFORMATION ONLY | ☐ Adopt Resolution (attach draft) | ☐ Hold Public Hearing* |
| | | **provide copy of hearing notice that was published* |

| | |
|---|---|
| **Submitted by:** Wendie Bright | **Department:** Auditor's Office |
| **Presenter (Name and Title):** N/A | **Estimated Time Needed:** N/A |

**Summary of Issue:**

Approve Affidavit for Duplicate of Lost Municipal Order or Warrant:
Warrant #91214 - Dominic Mindrum - August 4, 2023 - $179.00

**Alternatives, Options, Effects on Others/Comments:**

**Recommended Action/Motion:**

Approve Affidavit for Duplicate of Lost Municipal Order or Warrant:
Warrant #91214 - Dominic Mindrum - August 4, 2023 - $179.00

**Financial Impact:**

*Is there a cost associated with this request?* ☐ *Yes* ☑ *No*

*What is the total cost, with tax and shipping? $*

*Is this budgeted?* ☐ *Yes* ☐ *No* *Please Explain:*

Legally binding agreements must have County Attorney approval prior to submission.

Affidavit for Duplicate of Lost Municipal Order or Warrant

STATE OF MINNESOTA,

County of Aitkin ) ss. ***Dominic Mindrum***

being duly sworn on oath says, that (s)he is the owner of a certain commissioner warrant,

dated the ***4th*** day of ***August*** , ***2023*** numbered ***91214*** ,

issued by Aitkin County to ***Dominic Mindrum*** ,

in the sum of ***$179.00*** , has been ***lost*** in the manner

*(lost or destroyed)*

following, to wit:

and that (s)he makes this affidavit for the purpose of having a duplicate thereof issued to him (her) according to law, and to that end herewith files his (her) indemnifying bond, with sureties to be approved, in the sum equal to double the amount of said commissioner warrant.

X_____

Subscribed and sworn to before me this _____ day of _____, 2024

X_____

Notary Public _____ County, Minnesota

My Commission Expires _____

# Board of County Commissioners
# Agenda Request

**2AF**
Agenda Item #

**Requested Meeting Date:** February 13, 2024

**Title of Item:** County On, Off and Sunday Sale Liquor License - Prairie River Retreat

| | | |
|---|---|---|
| ☐ REGULAR AGENDA | **Action Requested:** | ☐ Direction Requested |
| ☑ CONSENT AGENDA | ☐ Approve/Deny Motion | ☐ Discussion Item |
| ☐ INFORMATION ONLY | ☑ Adopt Resolution (attach draft) | ☐ Hold Public Hearing* |
| | **provide copy of hearing notice that was published* | |

| | |
|---|---|
| **Submitted by:** Christy M. Bishop | **Department:** Auditor's Office |
| **Presenter (Name and Title):** | **Estimated Time Needed:** |

**Summary of Issue:**

Application for Renewal for County On, Off and Sunday Sale Liquor License for Prairie River Retreat, located at 51272 Lake Avenue, McGregor, MN 55760: Township of Shamrock

**Alternatives, Options, Effects on Others/Comments:**

**Recommended Action/Motion:**
Resolution to approve renewal of County On, Off and Sunday Sales Liquor License for Prairie River Retreat, located at 51272 Lake Avenue, McGregor, MN 55760: Township of Shamrock

**Financial Impact:**
*Is there a cost associated with this request?* ☐ *Yes* ☑ *No*
*What is the total cost, with tax and shipping? $*
*Is this budgeted?* ☐ *Yes* ☑ *No* *Please Explain:*

Legally binding agreements must have County Attorney approval prior to submission.

**CERTIFIED COPY OF RESOLUTION OF COUNTY BOARD OF AITKIN COUNTY, MINNESOTA**

ADOPTED February 13, 2024

By Commissioner: xxx **20240213-xxx**

**County On, Off and Sunday Sale Liquor License – Prairie River Retreat**

**NOW THEREFORE BE IT RESOLVED,** the Aitkin County Board of Commissioners agrees to approve the following renewal for a liquor license for the period of February 13, 2024 - December 31, 2024:

**"ON, OFF AND SUNDAY"** Sale:

Prairie River Retreat, located at 51272 Lake Avenue, McGregor, MN 55760: Township of Shamrock

Commissioner xxx moved the adoption of the resolution and it was declared adopted upon the following vote

xxx MEMBERS PRESENT All Members Voting xxx

**STATE OF MINNESOTA}**
**COUNTY OF AITKIN}**

I, Jessica Seibert, County Administrator, Aitkin County, Minnesota do hereby certify that I have compared the foregoing with the original resolution filed in the Administration Office of Aitkin County in Aitkin, Minnesota as stated in the minutes of the proceedings of said Board on the 13th day of February, 2024, and that the same is a true and correct copy of the whole thereof.

**Witness my hand and seal this 13th day of February, 2024**

Jessica Seibert
County Administrator

# Board of County Commissioners Agenda Request

**2AG**
Agenda Item #

**Requested Meeting Date:** February 13, 2024

**Title of Item:** LG220 Application for Exempt Gambling -Ducks Unlimited Aitkin Area-3/2024

| | | |
|---|---|---|
| ☐ REGULAR AGENDA | **Action Requested:** | ☐ Direction Requested |
| ☑ CONSENT AGENDA | ☐ Approve/Deny Motion | ☐ Discussion Item |
| ☐ INFORMATION ONLY | ☑ Adopt Resolution (attach draft) | ☐ Hold Public Hearing* |
| | **provide copy of hearing notice that was published* | |

| | |
|---|---|
| **Submitted by:** Christy M. Bishop | **Department:** Auditor's Office |
| **Presenter (Name and Title):** | **Estimated Time Needed:** |

**Summary of Issue:**

Event Date: March 23, 2024

Application for Exempt Gambling Permit: LG220 - Ducks Unlimited Aitkin Area Chapter - Raffle: Location of event Castaways 32360 215th Lane Isle, MN 56342 - Lakeside Township

**Alternatives, Options, Effects on Others/Comments:**

**Recommended Action/Motion:**
Motion to adopt attached resolution.

**Financial Impact:**
*Is there a cost associated with this request?* ☐ *Yes* ☑ *No*
*What is the total cost, with tax and shipping? $*
*Is this budgeted?* ☐ *Yes* ☑ *No* *Please Explain:*

Legally binding agreements must have County Attorney approval prior to submission.

**CERTIFIED COPY OF RESOLUTION OF COUNTY BOARD OF AITKIN COUNTY, MINNESOTA**

ADOPTED February 13, 2024

By Commissioner: xxx **20240213-xxx**

**LG 220 Application for Exempt Permit – Ducks Unlimited Garrison Wildlife Chapter - 3/2024**

**BE IT RESOLVED**, The Aitkin County Board of Commissioners agrees to approve the Application for Exempt Permit – Form LG220 – of the Ducks Unlimited Aitkin Area Chapter Application for Exempt Gambling Permit: Raffle March 23, 2024: Location of event Castaways 32360 215th Lane Isle, MN 56342 - Lakeside Township

Commissioner xxx moved the adoption of the resolution and it was declared adopted upon the following vote

xxx MEMBERS PRESENT All Members Voting xxx

**STATE OF MINNESOTA}**
**COUNTY OF AITKIN}**

I, Jessica Seibert, County Administrator, Aitkin County, Minnesota do hereby certify that I have compared the foregoing with the original resolution filed in the Administration Office of Aitkin County in Aitkin, Minnesota as stated in the minutes of the proceedings of said Board on the 13th day of February 2024, and that the same is a true and correct copy of the whole thereof.

**Witness my hand and seal this 13th day of February, 2024**

Jessica Seibert
County Administrator

# Board of County Commissioners
# Agenda Request

**2AH**
Agenda Item #

**Requested Meeting Date:** February 13, 2024

**Title of Item:** LG220 Application for Exempt Gambling -Ducks Unlimited Aitkin Area-4/2024

| | | |
|---|---|---|
| ☐ REGULAR AGENDA | **Action Requested:** | ☐ Direction Requested |
| ☑ CONSENT AGENDA | ☐ Approve/Deny Motion | ☐ Discussion Item |
| ☐ INFORMATION ONLY | ☑ Adopt Resolution (attach draft) | ☐ Hold Public Hearing* |
| | **provide copy of hearing notice that was published* | |

| | |
|---|---|
| **Submitted by:** Christy M. Bishop | **Department:** Auditor's Office |
| **Presenter (Name and Title):** | **Estimated Time Needed:** |

**Summary of Issue:**

Event Date (Raffle): April 26, 2024

Application for Exempt Gambling Permit: LG220 - Ducks Unlimited Aitkin Area Chapter - Raffle: Location of event Wealthwood Rod and Gun Club: 23573 420th Pl Aitkin, MN 56431: Hazelton Township

**Alternatives, Options, Effects on Others/Comments:**

**Recommended Action/Motion:**

Motion to adopt attached resolution.

**Financial Impact:**

*Is there a cost associated with this request?* ☐ *Yes* ☑ *No*

*What is the total cost, with tax and shipping? $*

*Is this budgeted?* ☐ *Yes* ☑ *No* *Please Explain:*

Legally binding agreements must have County Attorney approval prior to submission.

**CERTIFIED COPY OF RESOLUTION OF COUNTY BOARD OF AITKIN COUNTY, MINNESOTA**

ADOPTED February 13, 2024

By Commissioner: xxx **20240213-xxx**

**LG 220 Application for Exempt Permit – Ducks Unlimited Garrison Wildlife Chapter -4/2024**

**BE IT RESOLVED**, The Aitkin County Board of Commissioners agrees to approve the Application for Exempt Permit – Form LG220 - Ducks Unlimited Aitkin Area Chapter - Raffle: Location of event Wealthwood Rod and Gun Club: 23573 420th Pl Aitkin, MN 56431: Hazelton Township – Date of Event April 26, 2024

Commissioner xxx moved the adoption of the resolution and it was declared adopted upon the following vote

xxx MEMBERS PRESENT All Members Voting xxx

**STATE OF MINNESOTA}**
**COUNTY OF AITKIN}**

I, Jessica Seibert, County Administrator, Aitkin County, Minnesota do hereby certify that I have compared the foregoing with the original resolution filed in the Administration Office of Aitkin County in Aitkin, Minnesota as stated in the minutes of the proceedings of said Board on the 13th day of February 2024, and that the same is a true and correct copy of the whole thereof.

**Witness my hand and seal this 13th day of February, 2024**

Jessica Seibert
County Administrator

Aitkin County

# Board of County Commissioners Agenda Request

**2AI**
Agenda Item #

**Requested Meeting Date:** February 13, 2024

**Title of Item:** Out of State Travel for Training

| | | |
|---|---|---|
| ☐ REGULAR AGENDA | **Action Requested:** | ☐ Direction Requested |
| ☑ CONSENT AGENDA | ☑ Approve/Deny Motion | ☐ Discussion Item |
| ☐ INFORMATION ONLY | ☐ Adopt Resolution (attach draft) | ☐ Hold Public Hearing* |
| | | **provide copy of hearing notice that was published* |

| **Submitted by:** | **Department:** |
|---|---|
| Sheriff Daniel Guida | Sheriff's Office |

| **Presenter (Name and Title):** | **Estimated Time Needed:** |
|---|---|
| Sheriff Daniel Guida | N/A |

**Summary of Issue:**
The Sheriff's Office is requesting County Board approval to send AIM VCET Commander Greg Payment to Iowa for a Tactical Warrant Service/Midwest Counter-drug training that is not offered locally in MN. The training dates are April 15-19th, 2024. The conference is hosted at the Midwest Counter-drug Training Center at Camp Dodge, Iowa and there is no cost for the training or lodging.

**Alternatives, Options, Effects on Others/Comments:**

**Recommended Action/Motion:**
I recommend sending Greg Payment to the Midwest Counter Drug Training at Camp Dodge, IA.

**Financial Impact:**
*Is there a cost associated with this request?* ☑ *Yes* ☐ *No*
*What is the total cost, with tax and shipping? $*
*Is this budgeted?* ☑ *Yes* ☐ *No* *Please Explain:*
Education funds (registration, meals, travel expenses) are budgeted.

Legally binding agreements must have County Attorney approval prior to submission.

# 2AJ

## AITKIN COUNTY BOARD OF COMMISSIONERS

| January 30, 2024 | 3:30 p.m. | Government Center Training Room |
|---|---|---|

Committee of the Whole Session Minutes

1.A **CALL TO ORDER**

Chair Wedel called the meeting to order at 3:30 p.m.

| Attendee Name | Title | Status |
|---|---|---|
| J. Mark Wedel | District #1 | Present |
| Laurie Westerlund | District #2 | Arrived Late |
| Travis Leiviska | District #3 | Present |
| Bret Sample | District #4 | Arrived Late |
| Michael Kearney | District #5 | Present |
| Jessica Seibert | County Administrator | Present |
| April Kellerman | Administrative Assistant | Present |

1.B **PLEDGE OF ALLEGIANCE**

1.C **APPROVAL OF AGENDA**

Motion to: Approve the agenda, as amended.

| | |
|---|---|
| **RESULT:** | **APPROVED (3 TO 0)** |
| **MOVER:** | Commissioner Travis Leiviska |
| **SECONDER:** | Commissioner Michael Kearney |
| | Added Item 3 |
| | Commissioners Westerlund and Sample arrived after agenda approval at 3:33pm |

2 **Facilities Discussion**

Jim Bright, Facilities Coordinator, discussed options for Health and Human Services and other future facility plans.

3 **Road Restriction Discussion**

John Welle, County Engineer, discussed current road conditions and the need to put on restrictions.

**Motion to Adjourn**

Motion made at 4:57 p.m.

| | |
|---|---|
| **MOVER:** | Commissioner Laurie Westerlund |
| **SECONDER:** | Commissioner Travis Leiviska |

J. Mark Wedel, Board Chair
Aitkin County Board of Commissioner

Jessica Seibert
County Administrator

# Board of County Commissioners Agenda Request

**3A**
Agenda Item #

**Requested Meeting Date:** 2-13-24

**Title of Item:** Award Contract 20244

| | | |
|---|---|---|
| ☑ REGULAR AGENDA | **Action Requested:** | ☐ Direction Requested |
| ☐ CONSENT AGENDA | ☐ Approve/Deny Motion | ☐ Discussion Item |
| ☐ INFORMATION ONLY | ☑ Adopt Resolution (attach draft) | ☐ Hold Public Hearing* |
| | | **provide copy of hearing notice that was published* |

| | |
|---|---|
| **Submitted by:** John Welle | **Department:** Highway Department |
| **Presenter (Name and Title):** John Welle, Aitkin County Engineer | **Estimated Time Needed:** 5 minutes |

**Summary of Issue:**

Bids were opened on Monday, January 22, 2024 for Contract No. 20244 which includes CP 001-090-042 - crack sealing on CH 15, CH 17, and portions of CH 1, CH 10, CH 12, CH 28 and 328th Avenue (Fleming Township Road).

As shown on the attached abstract of bids, five bids were received with Lot Pros, Inc. - Fergus Falls, MN submitting the low bid in the amount of $178,596.50. With the cost of this contract estimated at $125,776.20,the low bid is 42% above the estimated amount.

**Alternatives, Options, Effects on Others/Comments:**

**Recommended Action/Motion:**

Award Contract 20244 to Lot Pros, Inc. by attached resolution.

**Financial Impact:**

*Is there a cost associated with this request?* ☑ *Yes* ☐ *No*

*What is the total cost, with tax and shipping?* $ 178,596.50 ($6,092 to be billed to Fleming Township)

*Is this budgeted?* ☑ *Yes* ☐ *No* *Please Explain:*

$120,000 was budgeted for this work in 2024.

Legally binding agreements must have County Attorney approval prior to submission.

# AITKIN COUNTY

## Bid Abstract

Project Name: 2024 Crack Sealing
Bid Opening: January 22, 2024 at 2:00 PM
Contract: 20244
Project Number: CP 001-090-042

| | Project: CP 001-090-042 - 2024 Crack Sealing | | | | Engineers Estimate | | Lot Pros Inc. - Fergus Falls, MN | | Northwest Asphalt & Maintenance - Thief River Falls, MN | | Asphalt Surface Technologies Corp. - St. Cloud, MN | | Fahrner Asphalt Sealers, LLC - Eau Claire, WI | | Allied Blacktop Company - Maple Grove, MN | |
|---|---|---|---|---|---|---|---|---|---|---|---|---|---|---|---|---|
| Line | Number | Description | Unit | Quantity | Unit Price | Total Price | Unit Price | Total Price | Unit Price | Total Price | Unit Price | Total Price | Unit Price | Total Price | Unit Price | Total Price |
| CSAH 1 - FROM CSAH 22 TO END OF PAVEMENT | | | | | | | | | | | | | | | | |
| 1 | 2021.501 | MOBILIZATION | LS | 1 | $300.00 | $300.00 | $1.00 | $1.00 | $625.00 | $625.00 | $1,000.00 | $1,000.00 | $2,000.00 | $2,000.00 | $7,500.00 | $7,500.00 |
| 2 | 2331.619 | SEAL BITUMINOUS PAVEMENT CRACKS | RDST | 190.1 | $54.00 | $10,265.40 | $80.00 | $15,208.00 | $86.00 | $16,348.60 | $127.00 | $24,142.70 | $177.93 | $33,824.49 | $228.00 | $43,342.80 |
| 3 | 2563.601 | TRAFFIC CONTROL | LS | 1 | $300.00 | $300.00 | $1.00 | $1.00 | $200.00 | $200.00 | $400.00 | $400.00 | $750.00 | $750.00 | $7,500.00 | $7,500.00 |
| | | TOTAL CSAH 1 - FROM CSAH 22 TO END OF PAVEMENT | | | | $10,865.40 | | $15,210.00 | | $17,173.60 | | $25,542.70 | | $36,574.49 | | $58,342.80 |
| CSAH 10 - FROM CSAH 3 TO CSAH 18 | | | | | | | | | | | | | | | | |
| 4 | 2021.501 | MOBILIZATION | LS | 1 | $300.00 | $300.00 | $1.00 | $1.00 | $625.00 | $625.00 | $1,000.00 | $1,000.00 | $2,000.00 | $2,000.00 | $7,500.00 | $7,500.00 |
| 5 | 2331.619 | SEAL BITUMINOUS PAVEMENT CRACKS | RDST | 584 | $54.00 | $31,536.00 | $90.00 | $52,560.00 | $86.00 | $50,224.00 | $127.00 | $74,168.00 | $177.93 | $103,911.12 | $228.00 | $133,152.00 |
| 6 | 2563.601 | TRAFFIC CONTROL | LS | 1 | $300.00 | $300.00 | $1.00 | $1.00 | $200.00 | $200.00 | $400.00 | $400.00 | $750.00 | $750.00 | $7,500.00 | $7,500.00 |
| | | TOTAL CSAH 10 - FROM CSAH 3 TO CSAH 18 | | | | $32,136.00 | | $52,562.00 | | $51,049.00 | | $75,568.00 | | $106,661.12 | | $148,152.00 |
| CSAH 12 - FROM 375TH AVE TO LANIE'S CORNER | | | | | | | | | | | | | | | | |
| 7 | 2021.501 | MOBILIZATION | LS | 1 | $300.00 | $300.00 | $1.00 | $1.00 | $625.00 | $625.00 | $1,000.00 | $1,000.00 | $2,000.00 | $2,000.00 | $7,500.00 | $7,500.00 |
| 8 | 2331.619 | SEAL BITUMINOUS PAVEMENT CRACKS | RDST | 144.7 | $54.00 | $7,813.80 | $70.00 | $10,129.00 | $86.00 | $12,444.20 | $127.00 | $18,376.90 | $177.93 | $25,746.47 | $228.00 | $32,991.60 |
| 9 | 2563.601 | TRAFFIC CONTROL | LS | 1 | $300.00 | $300.00 | $1.00 | $1.00 | $200.00 | $200.00 | $400.00 | $400.00 | $750.00 | $750.00 | $7,500.00 | $7,500.00 |
| | | TOTAL CSAH 12 - FROM 375TH AVE TO LANIE'S CORNER | | | | $8,413.80 | | $10,131.00 | | $13,269.20 | | $19,776.90 | | $28,496.47 | | $47,991.60 |
| CSAH 12 - FROM CSAH 39 TO TH 47 | | | | | | | | | | | | | | | | |
| 10 | 2021.501 | MOBILIZATION | LS | 1 | $300.00 | $300.00 | $1.00 | $1.00 | $625.00 | $625.00 | $1,000.00 | $1,000.00 | $2,000.00 | $2,000.00 | $7,500.00 | $7,500.00 |
| 11 | 2331.619 | SEAL BITUMINOUS PAVEMENT CRACKS | RDST | 116.2 | $54.00 | $6,274.80 | $70.00 | $8,134.00 | $86.00 | $9,993.20 | $127.00 | $14,757.40 | $177.93 | $20,675.47 | $228.00 | $26,493.60 |
| 12 | 2563.601 | TRAFFIC CONTROL | LS | 1 | $300.00 | $300.00 | $1.00 | $1.00 | $200.00 | $200.00 | $400.00 | $400.00 | $750.00 | $750.00 | $7,500.00 | $7,500.00 |
| | | TOTAL CSAH 12 -FROM CSAH 39 TO TH 47 | | | | $6,874.80 | | $8,136.00 | | $10,818.20 | | $16,157.40 | | $23,425.47 | | $41,493.60 |
| CSAH 15 | | | | | | | | | | | | | | | | |
| 13 | 2021.501 | MOBILIZATION | LS | 1 | $300.00 | $300.00 | $1.00 | $1.00 | $625.00 | $625.00 | $1,000.00 | $1,000.00 | $2,000.00 | $2,000.00 | $7,500.00 | $7,500.00 |
| 14 | 2331.619 | SEAL BITUMINOUS PAVEMENT CRACKS | RDST | 321 | $54.00 | $17,334.00 | $75.00 | $24,075.00 | $86.00 | $27,606.00 | $127.00 | $40,767.00 | $177.93 | $57,115.53 | $228.00 | $73,188.00 |
| 15 | 2563.601 | TRAFFIC CONTROL | LS | 1 | $300.00 | $300.00 | $1.00 | $1.00 | $200.00 | $200.00 | $400.00 | $400.00 | $750.00 | $750.00 | $7,500.00 | $7,500.00 |
| | | TOTAL CSAH 15 | | | | $17,934.00 | | $24,077.00 | | $28,431.00 | | $42,167.00 | | $59,865.53 | | $88,188.00 |
| CSAH 17 | | | | | | | | | | | | | | | | |
| 16 | 2021.501 | MOBILIZATION | LS | 1 | $300.00 | $300.00 | $1.00 | $1.00 | $625.00 | $625.00 | $1,000.00 | $1,000.00 | $2,000.00 | $2,000.00 | $7,500.00 | $7,500.00 |
| 17 | 2331.619 | SEAL BITUMINOUS PAVEMENT CRACKS | RDST | 374.9 | $54.00 | $20,244.60 | $65.00 | $24,368.50 | $86.00 | $32,241.40 | $127.00 | $47,612.30 | $177.93 | $66,705.96 | $228.00 | $85,477.20 |
| 18 | 2563.601 | TRAFFIC CONTROL | LS | 1 | $300.00 | $300.00 | $1.00 | $1.00 | $200.00 | $200.00 | $400.00 | $400.00 | $750.00 | $750.00 | $7,500.00 | $7,500.00 |
| | | TOTAL CSAH 17 | | | | $20,844.60 | | $24,370.50 | | $33,066.40 | | $49,012.30 | | $69,455.96 | | $100,477.20 |
| CSAH 28 - FROM US HWY 169 TO TH 210 | | | | | | | | | | | | | | | | |
| 19 | 2021.501 | MOBILIZATION | LS | 1 | $300.00 | $300.00 | $1.00 | $1.00 | $625.00 | $625.00 | $1,000.00 | $1,000.00 | $2,000.00 | $2,000.00 | $7,500.00 | $7,500.00 |
| 20 | 2331.619 | SEAL BITUMINOUS PAVEMENT CRACKS | RDST | 422.4 | $54.00 | $22,809.60 | $90.00 | $38,016.00 | $86.00 | $36,326.40 | $127.00 | $53,644.80 | $177.93 | $75,157.63 | $228.00 | $96,307.20 |
| 21 | 2563.601 | TRAFFIC CONTROL | LS | 1 | $300.00 | $300.00 | $1.00 | $1.00 | $200.00 | $200.00 | $400.00 | $400.00 | $750.00 | $750.00 | $7,500.00 | $7,500.00 |
| | | TOTAL CSAH 28 - FROM US HWY 169 TO TH 210 | | | | $23,409.60 | | $38,018.00 | | $37,151.40 | | $55,044.80 | | $77,907.63 | | $111,307.20 |
| 328TH AVE | | | | | | | | | | | | | | | | |
| 22 | 2021.501 | MOBILIZATION | LS | 1 | $300.00 | $300.00 | $1.00 | $1.00 | $625.00 | $625.00 | $1,000.00 | $1,000.00 | $2,000.00 | $2,000.00 | $7,500.00 | $7,500.00 |
| 23 | 2331.619 | SEAL BITUMINOUS PAVEMENT CRACKS | RDST | 87 | $54.00 | $4,698.00 | $70.00 | $6,090.00 | $86.00 | $7,482.00 | $127.00 | $11,049.00 | $177.93 | $15,479.91 | $228.00 | $19,836.00 |
| 24 | 2563.601 | TRAFFIC CONTROL | LS | 1 | $300.00 | $300.00 | $1.00 | $1.00 | $200.00 | $200.00 | $400.00 | $400.00 | $750.00 | $750.00 | $7,500.00 | $7,500.00 |
| | | TOTAL 328TH AVE | | | | $5,298.00 | | $6,092.00 | | $8,307.00 | | $12,449.00 | | $18,229.91 | | $34,836.00 |
| | | Totals for Project CP 001-090-042/Contract 20244 | | | | $125,776.20 | | $178,596.50 | | $199,265.80 | | $295,718.10 | | $420,616.58 | | $630,788.40 |
| | | % of Estimate for Project CP 001-090-042/Contract 20244 | | | | | | 42% OVER | | 58.43% OVER | | 135.11% OVER | | 234.42% OVER | | 401.52% OVER |

**I hereby certify that this is an exact reproduction of bids received.**

**Certified By:** _____ **License No.** 24340
**Date:** 1-23-24

**CERTIFIED COPY OF RESOLUTION OF COUNTY BOARD OF AITKIN COUNTY, MINNESOTA**

ADOPTED February 13, 2024

By Commissioner: xxx **20240213-xxx**

## Award Contract 20244

**WHEREAS,** Contract No. 20244 is for construction of CP 001-090-042, and

**WHEREAS,** sealed bids were opened for this project at 2:00 p.m. on Monday, January 22, 2024 with a total of five bids received, and

**WHEREAS,** Lot Pros, Inc. - Fergus Falls, MN - was the lowest responsible bidder in the amount of $178,596.50.

**NOW THEREFORE, BE IT RESOLVED,** that Lot Pros Inc. be awarded Contract 20244.

**BE IT FURTHER RESOLVED,** that the chairperson of the Aitkin County Board and the Aitkin County Auditor are hereby authorized and directed to enter into a contract on behalf of Aitkin County with said low bidder upon presentation of proper contract documents

Commissioner xxx seconded the adoption of the resolution and it was declared adopted upon the following vote

xxx MEMBERS PRESENT All Members Voting xxx

**STATE OF MINNESOTA}**
**COUNTY OF AITKIN}**

I, Jessica Seibert, County Administrator, Aitkin County, Minnesota do hereby certify that I have compared the foregoing with the original resolution filed in the Administration Office of Aitkin County in Aitkin, Minnesota as stated in the minutes of the proceedings of said Board on the 13th day of February 2024, and that the same is a true and correct copy of the whole thereof.

**Witness my hand and seal this 13th day of February 2024**

Jessica Seibert
County Administrator

# Board of County Commissioners Agenda Request

**3B**
Agenda Item #

**Requested Meeting Date:** 2-13-24

**Title of Item:** Federal Participation in Advance Construction Agreement No. 1055543

| | | |
|---|---|---|
| ☑ REGULAR AGENDA | **Action Requested:** | ☐ Direction Requested |
| ☐ CONSENT AGENDA | ☐ Approve/Deny Motion | ☐ Discussion Item |
| ☐ INFORMATION ONLY | ☑ Adopt Resolution (attach draft) | ☐ Hold Public Hearing* |
| | **provide copy of hearing notice that was published* | |

| | |
|---|---|
| **Submitted by:** John Welle | **Department:** Highway |
| **Presenter (Name and Title):** John Welle, Aitkin County Engineer | **Estimated Time Needed:** 5 minutes |

**Summary of Issue:**

SP 001-602-014 is a bituminous resurfacing project that will take place in 2024 on the 10.2-mile segment of CH 2 from State Highway 65 to the Pine County Line. Federal funding for this project is included in the 2025 Minnesota State Transportion Improvement Program (STIP). Because the project will be constructed before the beginning of federal Fiscal Year 2025, the attached agreement is needed.

**Alternatives, Options, Effects on Others/Comments:**

**Recommended Action/Motion:**

Approve attached resolution.

**Financial Impact:**

*Is there a cost associated with this request?* ☐ *Yes* ☑ *No*

*What is the total cost, with tax and shipping? $*

*Is this budgeted?* ☐ *Yes* ☐ *No* *Please Explain:*

Legally binding agreements must have County Attorney approval prior to submission.

DEPARTMENT OF TRANSPORTATION

**STATE OF MINNESOTA**

**AGENCY AGREEMENT**

**for**

**FEDERAL PARTICIPATION IN ADVANCE CONSTRUCTION**

**State Project Number: 001-602-014**

**FAIN Number: STBG 0124(136)**

This Agreement is entered into by and between Aitkin County ("Local Government") and the State of Minnesota acting through its Commissioner of Transportation ("MnDOT").

**RECITALS**

1. MnDOT Contract Number dcp(1052140) which has been executed between the Local Government and MnDOT, appoints MnDOT as the Local Government's agent to receive and disburse transportation related federal funds, and sets forth duties and responsibilities for letting, payment, and other procedures for a federally funded contract let by the Local Government; and
2. Pursuant to Minnesota Statutes Section 161.36, the Local Government desires MnDOT to act as the Local Government's agent to accept and disburse federal funds for the construction, improvement, or enhancement of transportation financed in whole or in part by federal funds, hereinafter referred to as the "Project"; and
3. The Local Government is proposing a federal aid project for CSAH 2 Pavement Resurfacing, hereinafter referred to as the "Project"; and
4. The Project is eligible for the expenditure of federal aid funds and is programmed in the approved federally approved STIP for fiscal year 2025, and is identified in MnDOT records as State Project 001-602-014, and in Federal Highway Administration ("FHWA") records as Minnesota Project STBG 0124(136); and
5. The Local Government desires to proceed with the construction of the project in advance of the year it is programmed for the federal funds; and
6. It is permissible under Federal Highway Administration procedures to perform advance construction of eligible projects with non-federal funds, with the intent to request federal funding for the federally eligible costs in a subsequent federal fiscal year(s), if sufficient funding and obligation authority are available; and
7. The Local Government desires to temporarily provide Local Government State Aid and/or other local funds in lieu of the federal funds so that the project may proceed prior to the fiscal year(s) designated in the STIP; and
8. MnDOT requires that the terms and conditions of this agency be set forth in an agreement.

**AGREEMENT TERMS**

**1. Term of Agreement**

1.1. **Effective Date.** This Agreement will be effective upon execution by the Local Government and by appropriate State officials, pursuant to Minnesota Statutes Section 16C.05, and will remain in effect for five

(5) years from the effective date or until all obligations set forth in this Agreement have been satisfactorily fulfilled, whichever occurs first.

**2. Local Government's Duties**

2.1. The Local Government will perform all of its duties and obligations in MnDOT Contract Number dcp(1052140), which is incorporated herein by reference, in the solicitation, letting, award, and administration of the construction of the Project.

**3. MnDOT's Duties**

3.1. MnDOT will perform all of its duties in accordance with MnDOT Contract Number dcp(1052140), which is incorporated herein by reference.

3.2. MnDOT will make the necessary requests to the FHWA for authorization to use federal funds for the Project, and for reimbursement of eligible costs pursuant to the terms of this Agreement.

3.3. MnDOT will request the conversion of the Project to federal funding of eligible costs, when funding and obligation authority are available.

3.4. At such time that the project is converted to federal funding and such funding is received by MnDOT, MnDOT will reimburse to the Local Government the federal aid share of the federally eligible costs, previously provided by the Local Government. Reimbursement for Local Government State Aid funds used in lieu of federal funds, will be deposited in the Local Government's State Aid Account. Reimbursement for other Local Government funds used in lieu of federal funds will be forwarded to the Local Government.

**4. Time**

4.1. The Local Government must comply with all time requirements described in this Agreement. In the performance of this Agreement, time is of the essence

4.2. The period of performance is defined as beginning on the date of federal authorization and ending on the date defined in the federal financial system or federal agreement ("end date"). **No work completed** after the **end date** will be eligible for federal funding. Local Government must submit all contract close out paperwork to MnDOT at least twenty-four months prior to the **end date**.

**5. Payment**

5.1. It is estimated that the total cost of the Project is $2,100,000. The remaining share will be paid by the Local Government. 80% of the eligible costs will be eligible for STBG funds in federal fiscal year 2025. This amount is $1,613,675.

5.2. The Local Government will pay any part of the cost or expense of the work that the FHWA does not pay.

5.3. Request for reimbursement of the federal aid share of the federally eligible costs can be made any time after the work is completed, however payment may not be made until after October 1, 2024 for federal fiscal year 2025. It could be earlier if funding and obligation authority are available (subject to the Area Transportation Partnership (ATP) policy).

5.4. The Local Government will make requests for reimbursement in accordance with the payment provisions in MnDOT Contract Number dcp(1052140), which is incorporated by reference, and will comply with the requirements of 2 CFR Part 200.

**6. Authorized Representatives**

6.1. MnDOT's Authorized Representative is:

Name: Angela Murphy, or their successor.

Title: State Aid, Federal Plans Engineer

Phone: 612-271-6210

Email: angela.murphy@state.mn.us

MnDOT's Authorized Representative has the responsibility to monitor Local Government's performance and the authority to accept the services provided under this Agreement. If the services are satisfactory, MnDOT's Authorized Representative will certify acceptance on each invoice submitted for payment.

6.2. The Local Government's Authorized Representative is:

Name: Mr. John Welle, or their successor.

Title: Aitkin County Engineer

Phone: 218-927-3741

Email: john.welle@co.aitkin.mn.us

If the Local Government's Authorized Representative changes at any time during this Agreement, the Local Government will immediately notify MnDOT.

**7. Assignment Amendments, Waiver, and Agreement Complete**

7.1. **Assignment.** The Local Government may neither assign nor transfer any rights or obligations under this Agreement without the prior written consent of MnDOT and a fully executed Assignment Agreement, executed and approved by the same parties who executed and approved this Agreement, or their successors in office.

7.2. **Amendments.** Any amendments to this Agreement must be in writing and will not be effective until it has been executed and approved by the same parties who executed and approved the original agreement, or their successors in office.

7.3. **Waiver.** If MnDOT fails to enforce any provision of this Agreement, that failure does not waive the provision or MnDOT's right to subsequently enforce it.

7.4. **Agreement Complete.** This Agreement contains all negotiations and agreements between MnDOT and the Local Government. No other understanding regarding this Agreement, whether written or oral, may be used to bind either party.

7.5. **Severability.** If any provision of this Agreement or the application thereof is found to be invalid or unenforceable to any extent, the remainder of the Agreement, including all material provisions and the application of such provisions, will not be affected and will be enforceable to the greatest extent permitted by the law.

7.6. **Electronic Records and Signatures.** The parties agree to contract by electronic means. This includes using electronic signatures and converting original documents to electronic records.

7.7. **Certification.** By signing this Agreement, the Local Government certifies that it is not suspended or debarred from receiving federal or state awards.

**8. Liability and Claims**

8.1. **Tort Liability.** Each party is responsible for its own acts and omissions and the results thereof to the extent authorized by law and will not be responsible for the acts and omissions of any others and the results thereof. The Minnesota Tort Claims Act, Minnesota Statutes Section 3.736, governs MnDOT liability.

8.2. **Claims.** The Local Government acknowledges that MnDOT is acting only as the Local Government's agent for acceptance and disbursement of federal funds, and not as a principal or co-principal with respect to the

Project. The Local Government will pay any and all lawful claims arising out of or incidental to the Project including, without limitation, claims related to contractor selection (including the solicitation, evaluation, and acceptance or rejection of bids or proposals), acts or omissions in performing the Project work, and any *ultra vires* acts. To the extent permitted by law, the Local Government will indemnify, defend (to the extent permitted by the Minnesota Attorney General), and hold MnDOT harmless from any claims or costs arising out of or incidental to the Project(s), including reasonable attorney fees incurred by MnDOT. The Local Government's indemnification obligation extends to any actions related to the certification of DBE participation, even if such actions are recommended by MnDOT.

**9. Audits**

9.1. Under Minn. Stat. § 16C.05, Subd.5, the books, records, documents, and accounting procedures and practices of the Local Government, or any other party relevant to this Agreement or transaction, are subject to examination by MnDOT and/or the State Auditor or Legislative Auditor, as appropriate, for a minimum of six years from the end of this Agreement, receipt and approval of all final reports, or the required period of time to satisfy all state and program retention requirements, whichever is later. The Local Government will take timely and appropriate action on all deficiencies identified by an audit.

9.2. All requests for reimbursement are subject to audit, at MnDOT's discretion. The cost principles outlined in 2 CFR 200.400-.476 will be used to determine whether costs are eligible for reimbursement under this Agreement.

9.3. If Local Government expends $750,000 or more in Federal Funds during the Local Government's fiscal year, the Local Government must have a single audit or program specific audit conducted in accordance with 2 CFR Part 200.

**10. Government Data Practices.** The Local Government and MnDOT must comply with the Minnesota Government Data Practices Act, Minn. Stat. Ch. 13, as it applies to all data provided by MnDOT under this Agreement, and as it applies to all data created, collected, received, stored, used, maintained, or disseminated by the Local Government under this Agreement. The civil remedies of Minn. Stat. §13.08 apply to the release of the data referred to in this clause by either the Local Government or MnDOT.

**11. Workers Compensation.** The Local Government certifies that it is in compliance with Minn. Stat. §176.181, Subd. 2, pertaining to workers' compensation insurance coverage. The Local Government's employees and agents will not be considered MnDOT employees. Any claims that may arise under the Minnesota Workers' Compensation Act on behalf of these employees and any claims made by any third party as a consequence of any act or omission on the part of these employees are in no way MnDOT's obligation or responsibility.

**12. Governing Law, Jurisdiction, and Venue.** Minnesota law, without regard to its choice-of-law provisions, governs this Agreement. Venue for all legal proceedings out of this Agreement, or its breach, must be in the appropriate state or federal court with competent jurisdiction in Ramsey County, Minnesota.

**13. Termination; Suspension**

13.1. **Termination by MnDOT or Commissioner of Administration.** MnDOT or Commissioner of Administration may unilaterally terminate this Agreement with or without cause, upon 30 days written notice to the Local Government. Upon termination, the Local Government will be entitled to payment, determined on a pro rata basis, for services satisfactorily performed.

13.2. **Termination for Cause.** MnDOT may immediately terminate this Agreement if MnDOT finds that there has been a failure to comply with the provisions of this Agreement, that reasonable progress has not been made, that fraudulent or wasteful activity has occurred, that the Local Government has been convicted of a criminal offense relating to a state agreement, or that the purposes for which the funds were granted have not been or will not be fulfilled. MnDOT may take action to protect the interests of MnDOT of Minnesota,

including the refusal to disburse additional funds and requiring the return of all or part of the funds already disbursed.

13.3. **Termination for Insufficient Funding.** MnDOT may immediately terminate this Agreement if:

13.3.1. Funding is not obtained from the Minnesota Legislature; or

13.3.2. Funding cannot be continued at a level sufficient to allow for the payment of the services covered here. Termination must be by written or fax notice to the Local Government. MnDOT is not obligated to pay for any services that are provided after notice and effective date of termination. However, the Local Government will be entitled to payment, determined on a pro rata basis, for services satisfactorily performed to the extent that funds are available. MnDOT will not be assessed any penalty if the Agreement is terminated because of the decision of the Minnesota Legislature, or other funding source, not to appropriate funds. MnDOT will provide the Local Government notice of the lack of funding within a reasonable time of MnDOT's receiving that notice.

13.4. **Suspension.** MnDOT may immediately suspend this Agreement in the event of a total or partial government shutdown due to the failure to have an approved budget by the legal deadline. Work performed by the Local Government during a period of suspension will be deemed unauthorized and undertaken at risk of non-payment.

14. **Data Disclosure.** Under Minn. Stat. § 270C.65, Subd. 3, and other applicable law, the Local Government consents to disclosure of its social security number, federal employer tax identification number, and/or Minnesota tax identification number, already provided to MnDOT, to federal and state tax agencies and state personnel involved in the payment of state obligations. These identification numbers may be used in the enforcement of federal and state tax laws which could result in action requiring the Local Government to file state tax returns and pay delinquent state tax liabilities, if any.

15. **Fund Use Prohibited.** The Local Government will not utilize any funds received pursuant to this Agreement to compensate, either directly or indirectly, any contractor, corporation, partnership, or business, however organized, which is disqualified or debarred from entering into or receiving a State contract. This restriction applies regardless of whether the disqualified or debarred party acts in the capacity of a general contractor, a subcontractor, or as an equipment or material supplier. This restriction does not prevent the Local Government from utilizing these funds to pay any party who might be disqualified or debarred after the Local Government's contract award on this Project.

16. **Discrimination Prohibited by Minnesota Statutes §181.59.** The Local Government will comply with the provisions of Minnesota Statutes §181.59 which requires that every contract for or on behalf of the State of Minnesota, or any county, city, town, township, school, school district or any other district in the state, for materials, supplies or construction will contain provisions by which Contractor agrees: 1) That, in the hiring of common or skilled labor for the performance of any work under any contract, or any subcontract, no Contractor, material supplier or vendor, will, by reason of race, creed or color, discriminate against the person or persons who are citizens of the United States or resident aliens who are qualified and available to perform the work to which the employment relates; 2) That no Contractor, material supplier, or vendor, will, in any manner, discriminate against, or intimidate, or prevent the employment of any person or persons identified in clause 1 of this section, or on being hired, prevent or conspire to prevent, the person or persons from the performance of work under any contract on account of race, creed or color; 3) That a violation of this section is a misdemeanor; and 4) That this contract may be canceled or terminated by the state of Minnesota, or any county, city, town, township, school, school district or any other person authorized to contracts for employment, and all money due, or to become due under the contract, may be forfeited for a second or any subsequent violation of the terms or conditions of this Agreement.

17. **Appendix II 2 CFR Part 200.** The Local Government agrees to comply with the following federal requirements as identified in 2 CFR 200, Uniform Administrative Requirements, Cost Principles and Audit Requirements for Federal

Awards, and agrees to pass through these requirements to its subcontractors and third party contractors, as applicable. In addition, the Local Government shall have the same meaning as "Contractor" in the federal requirements listed below.

17.1.1. Contracts for more than the simplified acquisition threshold, which is the inflation adjusted amount determined by the Civilian Agency Acquisition Council and the Defense Acquisition Regulations Council (Councils) as authorized by 41 U.S.C. 1908, must address administrative, contractual, or legal remedies in instances where contractors violate or breach contract terms, and provide for such sanctions and penalties as appropriate.

17.1.2. All contracts in excess of $10,000 must address termination for cause and for convenience by the non-Federal entity including the manner by which it will be effected and the basis for settlement.

17.1.3. Equal Employment Opportunity. Except as otherwise provided under 41 CFR Part 60, all contracts that meet the definition of "federally assisted construction contract" in 41 CFR Part 60-1.3 must include the equal opportunity clause provided under 41 CFR 60-1.4(b), in accordance with Executive Order 11246, "Equal Employment Opportunity" (30 FR 12319, 12935, 3 CFR Part, 1964-1965 Comp., p. 339), as amended by Executive Order 11375, "Amending Executive Order 11246 Relating to Equal Employment Opportunity," and implementing regulations at 41 CFR part 60, "Office of Federal Contract Compliance Programs, Equal Employment Opportunity, Department of Labor."

17.1.4. Davis-Bacon Act, as amended (40 U.S.C. 3141-3148). When required by Federal program legislation, all prime construction contracts in excess of $2,000 awarded by non-Federal entities must include a provision for compliance with the Davis-Bacon Act (40 U.S.C. 3141-3144, and 3146-3148) as supplemented by Department of Labor regulations (29 CFR Part 5, "Labor Standards Provisions Applicable to Contracts Covering Federally Financed and Assisted Construction"). In accordance with the statute, contractors must be required to pay wages to laborers and mechanics at a rate not less than the prevailing wages specified in a wage determination made by the Secretary of Labor. In addition, contractors must be required to pay wages not less than once a week. The non-Federal entity must place a copy of the current prevailing wage determination issued by the Department of Labor in each solicitation. The decision to award a contract or subcontract must be conditioned upon the acceptance of the wage determination. The non-Federal entity must report all suspected or reported violations to the Federal awarding agency. The contracts must also include a provision for compliance with the Copeland "Anti-Kickback" Act (40 U.S.C. 3145), as supplemented by Department of Labor regulations (29 CFR Part 3, "Contractors and Subcontractors on Public Building or Public Work Financed in Whole or in Part by Loans or Grants from the United States"). The Act provides that each contractor or subrecipient must be prohibited from inducing, by any means, any person employed in the construction, completion, or repair of public work, to give up any part of the compensation to which he or she is otherwise entitled. The non-Federal entity must report all suspected or reported violations to the Federal awarding agency.

17.1.5. Contract Work Hours and Safety Standards Act (40 U.S.C. 3701-3708). Where applicable, all contracts awarded by the non-Federal entity in excess of $100,000 that involve the employment of mechanics or laborers must include a provision for compliance with 40 U.S.C. 3702 and 3704, as supplemented by Department of Labor regulations (29 CFR Part 5). Under 40 U.S.C. 3702 of the Act, each contractor must be required to compute the wages of every mechanic and laborer on the basis of a standard work week of 40 hours. Work in excess of the standard work week is permissible provided that the worker is compensated at a rate of not less than one and a half times the basic rate of pay for all hours worked in excess of 40 hours in the work week. The requirements of 40 U.S.C. 3704 are applicable to construction work and provide that no laborer or mechanic must be required to work in surroundings or under working conditions which are unsanitary, hazardous or dangerous. These requirements do not apply to the purchases of supplies or materials or articles

ordinarily available on the open market, or contracts for transportation or transmission of intelligence.

17.1.6. Rights to Inventions Made Under a Contract or Agreement. If the Federal award meets the definition of "funding agreement" under 37 CFR § 401.2 (a) and the recipient or subrecipient wishes to enter into a contract with a small business firm or nonprofit organization regarding the substitution of parties, assignment or performance of experimental, developmental, or research work under that "funding agreement," the recipient or subrecipient must comply with the requirements of 37 CFR Part 401, "Rights to Inventions Made by Nonprofit Organizations and Small Business Firms Under Government Grants, Contracts and Cooperative Agreements," and any implementing regulations issued by the awarding agency.

17.1.7. Clean Air Act (42 U.S.C. 7401-7671q.) and the Federal Water Pollution Control Act (33 U.S.C. 1251-1387), as amended - Contracts and subgrants of amounts in excess of $150,000 must contain a provision that requires the non-Federal award to agree to comply with all applicable standards, orders or regulations issued pursuant to the Clean Air Act (42 U.S.C. 7401-7671q) and the Federal Water Pollution Control Act as amended (33 U.S.C. 1251-1387). Violations must be reported to the Federal awarding agency and the Regional Office of the Environmental Protection Agency (EPA).

17.1.8. Debarment and Suspension (Executive Orders 12549 and 12689) - A contract award (see 2 CFR 180.220) must not be made to parties listed on the governmentwide exclusions in the System for Award Management (SAM), in accordance with the OMB guidelines at 2 CFR 180 that implement Executive Orders 12549 (3 CFR part 1986 Comp., p. 189) and 12689 (3 CFR part 1989 Comp., p. 235), "Debarment and Suspension." SAM Exclusions contains the names of parties debarred, suspended, or otherwise excluded by agencies, as well as parties declared ineligible under statutory or regulatory authority other than Executive Order 12549.

17.1.9. Byrd Anti-Lobbying Amendment (31 U.S.C. 1352) - Contractors that apply or bid for an award exceeding $100,000 must file the required certification. Each tier certifies to the tier above that it will not and has not used Federal appropriated funds to pay any person or organization for influencing or attempting to influence an officer or employee of any agency, a member of Congress, officer or employee of Congress, or an employee of a member of Congress in connection with obtaining any Federal contract, grant or any other award covered by 31 U.S.C. 1352. Each tier must also disclose any lobbying with non-Federal funds that takes place in connection with obtaining any Federal award. Such disclosures are forwarded from tier to tier up to the non-Federal award.

17.1.10. Local Government will comply with 2 CFR § 200.323.

17.1.11. Local Government will comply with 2 CFR § 200.216.

17.1.12. Local Government will comply with 2 CFR § 200.322.

17.2. **Drug-Free Workplace.** The Local Government will comply with the Drug-Free Workplace requirements under subpart B of 49 C.F.R. Part 32.

17.3. **Title VI/Non-discrimination Assurances.** The Local Government hereby agrees that, as a condition of receiving any Federal financial assistance under this Agreement, it will comply with Title VI of the Civil Rights Act of 1964 (78 Stat. 252, 42 U.S.C. § 2000d), related nondiscrimination statutes (i.e., 23 U.S.C. § 324, Section 504 of the Rehabilitation Act of 1973 as amended, and the Age Discrimination Act of 1975), and applicable regulatory requirements to the end that no person in the United States shall, on the grounds of race, color, national origin, sex, disability, or age be excluded from participation in, be denied the benefits of, or otherwise be subjected to discrimination under any program or activity for which the Local Government receives Federal financial assistance.

The Local Government hereby agrees to comply with all applicable US DOT Standard Title VI/Non-Discrimination Assurances contained in DOT Order No. 1050.2A, and in particular Appendices A and E, which can be found at: https://edocs-public.dot.state.mn.us/edocs_public/DMResultSet/download?docId=11149035. If federal funds are included in any contract, the Local Government will ensure the appendices and solicitation language within the assurances are inserted into contracts as required. State may conduct a review of the Local Government's compliance with this provision. The Local Government must cooperate with State throughout the review process by supplying all requested information and documentation to State, making Local Government staff and officials available for meetings as requested, and correcting any areas of non-compliance as determined by State.

17.4. **Buy America.** The Local Government must comply with the Buy America domestic preferences contained in the Build America, Buy America Act (Sections 70901-52 of the Infrastructure Investment and Jobs Act, Public Law 117-58) and as implemented by US DOT operating agencies.

17.5. **Federal Funding Accountability and Transparency Act (FFATA).**

17.5.1. This Agreement requires the Local Government to provide supplies and/or services that are funded in whole or in part by federal funds that are subject to FFATA. The Local Government is responsible for ensuring that all applicable requirements, including but not limited to those set forth herein, of FFATA are met and that the Local Government provides information to the MnDOT as required.

a. Reporting of Total Compensation of the Local Government's Executives.

b. The Local Government shall report the names and total compensation of each of its five most highly compensated executives for the Local Government's preceding completed fiscal year, if in the Local Government's preceding fiscal year it received:

i. 80 percent or more of the Local Government's annual gross revenues from Federal procurement contracts and Federal financial assistance subject to the Transparency Act, as defined at 2 CFR 170.320 (and subawards); and

ii. $25,000,000 or more in annual gross revenues from Federal procurement contracts (and subcontracts), and Federal financial assistance subject to the Transparency Act (and subawards); and

iii. The public does not have access to information about the compensation of the executives through periodic reports filed under section 13(a) or 15(d) of the Securities Exchange Act of 1934 (15 U.S.C. 78m(a), 78o(d)) or section 6104 of the Internal Revenue Code of 1986. (To determine if the public has access to the compensation information, see the U.S. Security and Exchange Commission total compensation filings at http://www.sec.gov/answers/execomp.htm.).

Executive means officers, managing partners, or any other employees in management positions.

c. Total compensation means the cash and noncash dollar value earned by the executive during the Local Government's preceding fiscal year and includes the following (for more information see 17 CFR 229.402(c)(2)):

i. Salary and bonus.

ii. Awards of stock, stock options, and stock appreciation rights. Use the dollar amount recognized for financial statement reporting purposes with respect to the fiscal year in accordance with the Statement of Financial Accounting Standards No. 123 (Revised 2004) (FAS 123R), Shared Based Payments.

iii. Earnings for services under non-equity incentive plans. This does not include group life, health, hospitalization or medical reimbursement plans that do not discriminate in favor of executives, and are available generally to all salaried employees.

iv. Change in pension value. This is the change in present value of defined benefit and actuarial pension plans.

v. Above-market earnings on deferred compensation which is not tax qualified.

17.5.2. Other compensation, if the aggregate value of all such other compensation (e.g. severance, termination payments, value of life insurance paid on behalf of the employee, perquisites or property) for the executive exceeds $10,000.

17.5.3. The Local Government must report executive total compensation described above to the MnDOT by the end of the month during which this Agreement is awarded.

17.5.4. The Local Government will obtain a Unique Entity Identifier (UEI) number and maintain this number for the term of this Agreement. This number shall be provided to MnDOT on the plan review checklist submitted with the plans for each project.

17.5.5. The Local Government's failure to comply with the above requirements is a material breach of this Agreement for which the MnDOT may terminate this Agreement for cause. The MnDOT will not be obligated to pay any outstanding invoice received from the Local Government unless and until the Local Government is in full compliance with the above requirements.

**[THE REMAINDER OF THIS PAGE HAS INTENTIONALLY BEEN LEFT BLANK.]**

Aitkin County
AitkinCounty certifies that the appropriate person(s) have executed the contract on behalf of the Local Government as required by applicable articles, bylaws, resolutions or ordinances

By:_____

Title:_____

Date:_____

By:_____

Title:_____

Date:_____

**DEPARTMENT OF TRANSPORTATION**

By:_____

Title: State Aid Engineer

Date:_____

**COMMISSIONER OF ADMINISTRATION**

By:_____

Date:_____

**SAMPLE RESOLUTION FOR AGENCY AGREEMENT**

BE IT RESOLVED, that pursuant to Minnesota Stat. Sec. 161.36, the Commissioner of Transportation be appointed as Agent of Aitkin County to accept as its agent, federal aid funds which may be made available for eligible transportation related projects.

BE IT FURTHER RESOLVED, the **Chairman* and the **Auditor* are hereby authorized and directed for and on behalf of Aitkin County to execute and enter into an agreement with the Commissioner of Transportation prescribing the terms and conditions of said federal aid participation as set forth and contained in "Minnesota Department of Transportation MnDOT Contract Number 1055543," a copy of which said agreement was before the County Board and which is made a part hereof by reference.

**Titles of persons authorized to sign on behalf of the* County*

**SAMPLE CERTIFICATION**

STATE OF MINNESOTA

COUNTY OF_____

I hereby certify that the foregoing Resolution is a true and correct copy of the Resolution presented to and adopted by Aitkin County name at a duly authorized meeting thereof held on the _____ day of _____, 20___, as shown by the minutes of said meeting in my possession.

_____

Auditor

Notary Public

My Commission expires _____

**(SEAL)**

**CERTIFIED COPY OF RESOLUTION OF COUNTY BOARD OF AITKIN COUNTY, MINNESOTA**

ADOPTED February 13, 2024

By Commissioner: xxx **20240213-xxx**

## Advance Construction Agreement No. 1055543

**BE IT RESOLVED**, that pursuant to Minnesota Stat. Sec. 161.36, the Commissioner of Transportation be appointed as Agent of Aitkin County to accept as it's agent, federal aid funds which may be made available for eligible transportation related projects.

**BE IT FURTHER RESOLVED,** the Aitkin County Engineer is hereby authorized and directed for and on behalf of Aitkin County to execute and enter into an agreement with the Commissioner of Transportation prescribing the terms and conditions of said federal aid participation as set forth and contained in "Minnesota Department of Transportation MnDOT Contract Number 1055543", a copy of which said agreement was before the County Board and which is made a part hereof by reference.

Commissioner xxx seconded the adoption of the resolution and it was declared adopted upon the following vote

xxx MEMBERS PRESENT All Members Voting xxx

**STATE OF MINNESOTA}**
**COUNTY OF AITKIN}**

I, Jessica Seibert, County Administrator, Aitkin County, Minnesota do hereby certify that I have compared the foregoing with the original resolution filed in the Administration Office of Aitkin County in Aitkin, Minnesota as stated in the minutes of the proceedings of said Board on the 13th day of February 2024, and that the same is a true and correct copy of the whole thereof.

**Witness my hand and seal this 13th day of February 2024**

Jessica Seibert
County Administrator

# Board of County Commissioners Agenda Request

**3C**
Agenda Item #

**Requested Meeting Date:** 2-13-24

**Title of Item:** Detour Agreement No. 1055754

| | |
|---|---|
| ☑ REGULAR AGENDA<br>☐ CONSENT AGENDA<br>☐ INFORMATION ONLY | **Action Requested:**<br>☐ Approve/Deny Motion<br>☑ Adopt Resolution (attach draft)<br>☐ Direction Requested<br>☐ Discussion Item<br>☐ Hold Public Hearing*<br>**provide copy of hearing notice that was published* |
| **Submitted by:** John Welle | **Department:** Highway |
| **Presenter (Name and Title):** John Welle, Aitkin County Engineer | **Estimated Time Needed:** 5 minutes |

**Summary of Issue:**

The attached Agreement No. 1055754 is proposed by MnDOT for utilization of Aitkin County highways during the 2024 construction season to accommodate the resurfacing of Trunk Hwy 18 from State Highway 47 in Malmo to State Highway 169. The proposed detour route includes County Highway 12 from State Highway 47 in Glen to County Highway 28, and County Highway 28 from County Highway 12 to State Highway 169. For use of these routes, an estimated payment of $4,421.85 will be paid to Aitkin County.

The Aitkin County Attorney has been asked to review this agreement prior to the meeting.

**Alternatives, Options, Effects on Others/Comments:**

**Recommended Action/Motion:**
Approve attached resolution.

**Financial Impact:**
*Is there a cost associated with this request?* ☐ *Yes* ☑ *No*
*What is the total cost, with tax and shipping? $*
*Is this budgeted?* ☐ *Yes* ☐ *No* *Please Explain:*

Legally binding agreements must have County Attorney approval prior to submission.

**CERTIFIED COPY OF RESOLUTION OF COUNTY BOARD OF AITKIN COUNTY, MINNESOTA**

ADOPTED February 13, 2024

By Commissioner: xxx **20240213-xxx**

## Detour Agreement No. 1055754

**IT IS RESOLVED THAT,** Aitkin County enter into MnDOT Agreement No. 1055754 with the State of Minnesota, Department of Transportation for the follow purposes:

> To provide for payment by the State to the County for the use of County State-Aid Highway No. 28 and County State-Aid Highway No. 12 as a detour route during the construction to be performed upon, along, and adjacent to Trunk Highway No. 18 from Truck Highway No. 169 to Trunk Highway No. 47 in Malmo under State Project No. 0102-28 (T.H. 18 =157).

**BE IT FURTHER RESOLVED,** that the Aitkin County Engineer is hereby authorized to execute the Agreement and any amendments to the Agreement.

Commissioner xxx seconded the adoption of the resolution and it was declared adopted upon the following vote

xxx MEMBERS PRESENT All Members Voting xxx

**STATE OF MINNESOTA}**
**COUNTY OF AITKIN}**

I, Jessica Seibert, County Administrator, Aitkin County, Minnesota do hereby certify that I have compared the foregoing with the original resolution filed in the Administration Office of Aitkin County in Aitkin, Minnesota as stated in the minutes of the proceedings of said Board on the 13th day of February 2024, and that the same is a true and correct copy of the whole thereof.

**Witness my hand and seal this 13th day of February 2024**

Jessica Seibert
County Administrator

MnDOT Contract No.: **1055754**

# STATE OF MINNESOTA
# DEPARTMENT OF TRANSPORTATION
# And
# AITKIN COUNTY
# DETOUR AGREEMENT
# For Trunk Highway No. 18 Detour

**State Project Number (S.P.):** 0102-28
**Trunk Highway Number (T.H.):** 18 = 157

**Original Amount Encumbered**
$4,421.85

This Agreement is between the State of Minnesota, acting through its Commissioner of Transportation ("State") and Aitkin County acting through its Board of Commissioners ("County").

**Recitals**

1. The State is about to perform Cold Inplace Recycling and culvert replacement construction upon, along, and adjacent to Trunk Highway No. 18 from T.H. 169 to T.H. 47 in Malmo under State Project No. 0102-28 (T.H. 18 = 157); and
2. The State requires a detour to carry T.H. 18 traffic on County State Aid Highway (C.S.A.H.) No. 28 and County State Aid Highway No. 12 during the construction; and
3. The State is willing to reimburse the County for the road life consumed by the detour as hereinafter set forth; and
4. Minnesota Statutes § 471.59, subdivision 10, § 161.25, and § 161.20, subdivision 2(b), authorize the parties to enter into this Agreement.

**Agreement**

**1. Term of Agreement; Incorporation of Exhibits**

**1.1.** ***Effective Date.*** This Agreement will be effective on the date the State obtains all signatures required by Minnesota Statutes § 16C.05, subdivision 2.

**1.2.** ***Expiration Date.*** This Agreement will expire when the State removes all detour signs, returns the temporary Trunk Highway detour to the County, and pays for the detour compensation.

**2. Agreement Between the Parties**

**2.1.** ***Detour.***

**A.** ***Location.*** The State will establish the T.H. 18 detour route on the following County road(s) as detailed in the project plans or Special Provisions:

C.S.A.H. 28 and C.S.A.H. 12 for a total distance of 11.43 miles.

**B.** ***Modification of the Detour Route.*** The State may modify the detour route or may add additional roadways to the official detour during construction. The State will request concurrence from the County for changes to the detour route. If such change increases the States total payment amount over the maximum obligation in Article 3.2, the Agreement will be amended.

C. ***Axle Loads and Over-Dimension Loads.*** The County will permit 10-ton axle loads on the detour route. Over-dimension loads will not be permitted except in cases of extreme emergency.

D. ***Traffic Control Devices.*** The State may install, maintain, and remove any traffic control devices it considers necessary to properly control the detoured traffic. The State may paint roadway markings, such as the centerline, edge lines, and necessary messages.

E. ***Detour Maintenance.*** The State will perform any necessary bituminous patching and ordinary maintenance on the roadway or shoulder of the County roads used for the detour, at no cost or expense to the County. Bituminous patching is defined as any work, including continuous full width overlays, less than 100 feet in length. All State expenditures beyond those required for bituminous patching and ordinary maintenance will be credited against the road life consumed reimbursement due the County.

F. ***Duration.*** The State will provide the County with advance notice identifying the dates the State intends to place and remove the detour signing.

**2.2.** ***Basis of State Cost (Road Life Consumed).*** The State will reimburse the County for the road life consumed by the detour using the following methods, as set forth in the Detour Management Study Final Report dated January 1991, and updated by MnDOT's Policy on Cost Participation for Cooperative Construction Projects and Maintenance Responsibilities between MnDOT and Local Units of Government.

A. The "Gas Tax Method" formula, multiplies the Combined Tax Factor per mile times the Average Daily Traffic ("ADT") count of vehicles diverted from the Trunk Highway times the county road length in miles times the duration of the detour in days to determine the State's cost for the road life consumed by the detour. If an ADT changes, the parties will amend the Agreement.

B. The County may, at its option, perform an "Equivalent Overlay Method" analysis. A State-approved firm, at no cost or expense to the State, must perform the testing and analysis. The County will keep records and accounts to verify any claim it might bring against the State for additional costs using the "Equivalent Overlay Method".

**3. Payment**

**3.1.** ***For Road Life Consumed.*** **$4,421.85** is the State's estimated cost for the road life consumed by the detour based on the data below:

| Stage 1 | Tax Factor | ADT | Road Length (Miles) | Duration (Days) | Cost |
|---|---|---|---|---|---|
| C.S.A.H. 28 and C.S.A.H. 12 | 0.00513 | 1,109 | 11.43 | 68 | $4,421.85 |

Road Life Consumed Amount: $4,421.85

The State's total payment for the road life consumed by the detour is equal to the amount computed by using the "Gas Tax Method" formula plus any amount determined by using the "Equivalent Overlay Method" analysis that is in excess of twice the "Gas Tax Method" amount.

**3.2.** ***Maximum Obligation.*** **$11,000.00** is the maximum obligation of the State under this Agreement and must not be exceeded unless the maximum obligation is increased by execution of an amendment to this Agreement.

**3.3.** ***Conditions of Payment.*** The State will pay the County the State's total road life consumed payment amount after performing the following conditions.

A. Execution of this Agreement and the County's receipt of the executed Agreement.

B. State's encumbrance of the State's total payment amount.

C. State's removal of all detour signs.

D. State notifies the County of the removal of the detour signs, and the number of days the detour was in effect.

E. State's receipt of a written request from the County for payment.

4. **Release of Road Restoration Obligations**

By accepting the State's road life consumed payment plan and total payment amount, the County releases the State of its obligation, under Minnesota Statutes § 161.25, to restore the county roads used as a T.H. 18 detour to as good of condition as they were before designation as temporary trunk highways.

5. **Authorized Representatives**

Each party's Authorized Representative is responsible for administering this Agreement and is authorized to give and receive any notice or demand required or permitted by this Agreement.

5.1. The State's Authorized Representative will be:

| | |
|---|---|
| Name, Title: | Scott Zeidler – Engineering Specialist Senior (or successor) |
| Address: | 7694 Industrial Park Rd., Baster, MN 56425 |
| Telephone: | 218-828-5800 |
| E-Mail: | scott.zeidler@state.mn.us |

5.2. The County's Authorized Representative will be:

| | |
|---|---|
| Name, Title: | John Welle – Aitkin County Engineer (or successor) |
| Address: | 1211 Air Park Dr., Aitkin, MN 56431 |
| Telephone: | 218-927-3741 |
| E-Mail: | jwelle@co.aitkin.mn.us |

6. **Assignment; Amendments; Waiver; Contract Complete**

6.1. ***Assignment.*** No party may assign or transfer any rights or obligations under this Agreement without the prior consent of the other party and a written assignment agreement, executed and approved by the same parties who executed and approved this Agreement, or their successors in office.

6.2. ***Amendments.*** Any amendment to this Agreement must be in writing and will not be effective until it has been executed and approved by the same parties who executed and approved the original Agreement, or their successors in office.

6.3. ***Waiver.*** If a party fails to enforce any provision of this Agreement, that failure does not waive the provision or the party's right to subsequently enforce it.

6.4. ***Contract Complete.*** This Agreement contains all prior negotiations and agreements between the State and the County. No other understanding regarding this Agreement, whether written or oral, may be used to bind either party.

7. **Liability**

The County and State will be responsible for their own acts and omissions, to the extent authorized by law. Minnesota Statutes § 3.736 governs the State's liability. Minnesota Statutes, Chapter 466 governs the liability of the County.

**8. State Audits**

Under Minnesota Statutes § 16C.05, subdivision 5, the County's books, records, documents, and accounting procedures and practices relevant to this Agreement are subject to examination by the State and the State Auditor or Legislative Auditor, as appropriate, for a minimum of six years from the end of this Agreement.

**9. Government Data Practices**

The County and State must comply with the Minnesota Government Data Practices Act, Minnesota Statutes Chapter 13, as it applies to all data provided by the State under this Agreement, and as it applies to all data created, collected, received, stored, used, maintained, or disseminated by the County under this Agreement. The civil remedies of Minnesota Statutes § 13.08 apply to the release of the data referred to in this clause by either the County or the State.

**10. Governing Law; Jurisdiction; Venue**

Minnesota law governs the validity, interpretation, and enforcement of this Agreement. Venue for all legal proceedings arising out of this Agreement, or its breach, must be in the appropriate state or federal court with competent jurisdiction in Ramsey County, Minnesota.

**11. Termination; Suspension**

**11.1.** ***By Mutual Agreement.*** This Agreement may be terminated by mutual agreement of the parties or by the State for insufficient funding as described below.

**11.2.** ***Termination for Insufficient Funding.*** The State may immediately terminate this Agreement if it does not obtain funding from the Minnesota Legislature, or other funding source; or if funding cannot be continued at a level sufficient to allow for the payment of the services covered here. Termination must be by written or fax notice to the County. The State is not obligated to pay for any services that are provided after notice and effective date of termination. However, the County will be entitled to payment, determined on a pro rata basis, for services satisfactorily performed to the extent that funds are available. The State will not be assessed any penalty if this Agreement is terminated because of the decision of the Minnesota Legislature, or other funding source, not to appropriate funds.

**11.3.** ***Suspension.*** In the event of a total or partial government shutdown, the State may suspend this Agreement and all work, activities, performance, and payments authorized through this Agreement. Any work performed during a period of suspension will be considered unauthorized work and will be undertaken at the risk of non-payment.

**12. Force Majeure**

No party will be responsible to the other for a failure to perform under this Agreement (or a delay in performance), if such failure or delay is due to a force majeure event. A force majeure event is an event beyond a party's reasonable control, including but not limited to, unusually severe weather, fire, floods, other acts of God, labor disputes, acts of war or terrorism, or public health emergencies.

[The remainder of this page has been intentionally left blank]

MnDOT Contract No.: **1055754**

**STATE ENCUMBRANCE VERIFICATION**

Individual certifies that funds have been encumbered as required by Minnesota Statutes § 16A.15 and 16C.05.

Signed: _____

Date: _____

SWIFT Purchase Order: **FY25**

**AITKIN COUNTY**

The undersigned certify that they have lawfully executed this contract on behalf of the Governmental Unit as required by applicable charter provisions, resolutions, or ordinances.

By: _____

Title: _____

Date: _____

By: _____

Title: _____

Date: _____

**DEPARTMENT OF TRANSPORTATION**

Approved:

By: _____
(District Engineer)

Date: _____

**COMMISSIONER OF ADMINISTRATION**

By: _____
(With Delegated Authority)

Date: _____

**INCLUDE COPY OF THE RESOLUTION APPROVING THE AGREEMENT AND AUTHORIZING ITS EXECUTION.**

## AITKIN COUNTY

## RESOLUTION

IT IS RESOLVED that Aitkin County enter into MnDOT Agreement No. 1055754 with the State of Minnesota, Department of Transportation for the following purposes:

To provide for payment by the State to the County for the use of County State Aid Highway No. 28 and County State Aid Highway No. 12 as a detour route during the construction to be performed upon, along, and adjacent to Trunk Highway No. 18 from Trunk Highway No. 169 to Trunk Highway No. 47 in Malmo under State Project No. 0102-28 (T.H. 18 = 157).

IT IS FURTHER RESOLVED that the _____
(Title)

and the _____
(Title)

are authorized to execute the Agreement and any amendments to the Agreement.

## CERTIFICATION

I certify that the above Resolution is an accurate copy of the Resolution adopted by the Board of Commissioners of Aitkin County at an authorized meeting held on the _____ day of _____, 2024, as shown by the minutes of the meeting in my possession.

Subscribed and sworn to me this
_____ day of _____, 2024

Notary Public _____

My Commission Expires _____

_____
(Signature)

_____
(Type or Print Name)

_____
(Title)

# Board of County Commissioners Agenda Request

**3D**
Agenda Item #

**Requested Meeting Date:** 2-13-24

**Title of Item:** Great River Energy Easement No. ML-PP-420

| | |
|---|---|
| ☑ REGULAR AGENDA<br>☐ CONSENT AGENDA<br>☐ INFORMATION ONLY | **Action Requested:**<br>☐ Approve/Deny Motion<br>☑ Adopt Resolution (attach draft)<br>☐ Direction Requested<br>☐ Discussion Item<br>☐ Hold Public Hearing*<br>**provide copy of hearing notice that was published* |
| **Submitted by:**<br>John Welle | **Department:**<br>Highway Department |
| **Presenter (Name and Title):**<br>John Welle, Aitkin County Engineer | **Estimated Time Needed:**<br>5 minutes |

**Summary of Issue:**

Great River Energy (GRE) is in the process of acquiring easements for the Portage Lake 69-kV transmission line along portions of Aitkin CH 5. The property containing the Palisade Area Highway Maintenance Facility will be impacted by this project. GRE has requested the attached easement from Aitkin County for compensation in the amount of $10,800. The County Attorney has reviewed and approved the easement language.

Authorization by the attached resolution is requested to execute the easement.

**Alternatives, Options, Effects on Others/Comments:**

**Recommended Action/Motion:**

Approve attached resolution.

**Financial Impact:**

*Is there a cost associated with this request?* ☐ *Yes* ☑ *No*

*What is the total cost, with tax and shipping? $*

*Is this budgeted?* ☐ *Yes* ☐ *No* *Please Explain:*

Legally binding agreements must have County Attorney approval prior to submission.

# EASEMENT

EASEMENT NO #: ML-PP-420

The undersigned, County of Aitkin, a political subdivision under the laws of Minnesota and successors and assigns ("Grantor"), in consideration of one dollar and other good and valuable consideration, the receipt and legal sufficiency of which is hereby acknowledged, does hereby grant unto Great River Energy, a Minnesota cooperative corporation, and its successors and assigns ("Grantee"), a perpetual and irrevocable easement (the "Easement") to construct, reconstruct, relocate, modify, operate, patrol, inspect, repair, upgrade, maintain and/or remove, in whole or in part, electric transmission and/or distribution lines, consisting of one or more circuits, communication lines, poles, towers, structures, wires, anchors, cables, guys, supports, fiber optics, communication equipment and other appurtenances related to the transmission and/or distribution of electrical energy and/or the transmission and distribution of communications data and information of any type whatsoever (collectively, the "Facilities") over, under and across certain lands situated in Aitkin County, Minnesota, described on the attached Exhibit A as "Grantor's Property." The Easement shall be limited to that certain part of Grantor's Property described as the "Easement Area" on the attached Exhibits A and B.

Grantor hereby grants to Grantee an easement to enter upon Grantor's Property to survey and/or locate the Facilities, and an easement for reasonable access over and across Grantor's Property to the Easement Area. Grantee shall have the right to occupy and use Grantor's Property adjoining the Easement Area during the construction, reconstruction, relocation, modification, operation, patrol, inspection, repair, upgrade, maintenance and/or removal of the Facilities.

Subject to Grantee's rights and Grantor's obligations herein, Grantor reserves the right to cultivate, use and occupy the surface of the Easement Area in a manner that is not inconsistent with Grantee's rights granted herein. Grantor shall not perform any act, or cause or permit acts to be done by others, that will interfere with or endanger the Facilities or Grantee's exercise of its rights hereunder. Without limiting the foregoing, Grantor shall not erect or place on the Easement Area any structures, buildings, trees or other objects or improvements, permanent or temporary, or cause or permit any others to do so, without Grantee's prior written approval. Grantor agrees to not materially alter the existing ground elevations in a manner that could interfere with the Facilities or Grantee's rights hereunder or that would result in ground or other clearance of less than the minimum requirements specified by the National Electrical Safety Code or any other applicable laws or regulations or other codes or policies. Grantor, its agents or assigns must submit plans of improvements or other installations within the Easement Area for review and written determination of compatibility by Grantee prior to installation. Grantee may approve such improvements or other installations, with or without conditions, or may deny the same, in the reasonable exercise of its sole discretion. Notwithstanding the foregoing, Grantor may install and maintain typical fencing within the Easement Area that does not interfere with the safe

operation of the Facilities; provided, that Grantor shall grant to Grantee access through any locked gates so that Grantee may have adequate access to the Easement Area.

Grantor agrees to execute and deliver to Grantee any additional documents requested by Grantee to amend and/or correct the legal description of the Easement Area to conform to the right of way actually occupied by the Facilities or otherwise as requested by Grantee to accomplish the purposes of this Easement.

Grantor covenants that Grantor is the owner of the Grantor's Property and has the right to convey the easements set forth herein. The Facilities installed and placed by or on behalf of Grantee on Grantor's Property shall remain the property of Grantee. Grantor acknowledges that agreed upon compensation represents payment in full for Grantee's exercise and/or future exercise of Grantee's rights hereunder and that Grantor shall have no further right to compensation except as to payment for actual damages as expressly provided for below.

Grantee shall have the right to remove from the Easement Area, in whole or in part, and in any manner, any structures, buildings or other objects or improvements, and any trees, shrubbery, brush or other vegetation, that, in Grantee's sole opinion, could, at any time, interfere with, impair or otherwise endanger the structural or electrical integrity of the Facilities or otherwise interfere with Grantee's rights hereunder. Grantee shall also have the right to trim, remove, or otherwise control any trees, shrubbery, brush or other vegetation that are located adjacent to the Easement Area that may, in Grantee's opinion, at any time interfere with, impair or otherwise endanger the Facilities.

Grantee may exercise all or any of its rights hereunder at any time, and Grantee's non-use or limited use of any such rights shall not constitute forfeiture of or otherwise limit any such rights. Grantee may assign and/or apportion and/or otherwise enter into agreements with respect to its rights hereunder, in whole or in part, in its sole discretion.

Grantee agrees to pay Grantor for this Easement prior to the construction of Facilities on the Easement Area.

Grantee agrees to pay a reasonable sum for actual damages directly caused to Grantor's crops, fences, roads, fields, lawns or other improvements by the construction, reconstruction, relocation, modification, operation, patrol, inspection, repair, upgrade, maintenance and/or removal of the Facilities, excepting and excluding trees, shrubbery, brush or other vegetation within the Easement Area and also excepting any improvements or other installations placed within the Easement Area without Grantee's advance written determination of compatibility.

The easements and covenants contained in this instrument shall run with and against the described real property. It is mutually understood and agreed that this instrument covers all the agreements and stipulations between the parties and that the terms herein may only be modified in writing. This instrument shall be governed by the laws of the State in which the property is located.

This Easement has been duly executed by Grantor on this _____ day of _____, 2023.

**GRANTOR**

By:_____

Its:_____

By:_____

Its:_____

STATE OF MINNESOTA

COUNTY OF _____

The foregoing instrument was acknowledged before me this _____ day of _____, 2023, by _____ of
*(NAME/TITLE)*

County of Aitkin, a political subdivision under the laws of Minnesota.
*(Name of Municipal Acknowledging)* *(State of Municipal)*

_____ (Notary)

STATE OF MINNESOTA

COUNTY OF _____

The foregoing instrument was acknowledged before me this _____ day of _____, 2023, by _____ of
*(NAME/TITLE)*

County of Aitkin, a political subdivision under the laws of Minnesota.
*(Name of Municipal Acknowledging)* *(State of Municipal)*

_____ (Notary)

Drafted By: Great River Energy
Land Rights Department
12300 Elm Creek Blvd
Maple Grove, MN 55369
(763) 445-5000
(To be returned to same after recording.)

# EXHIBIT "A"

## Existing Property

That part of the Southwest Quarter of the Northwest Quarter (SW1/4 of NW1/4) of Section 26, Township 49, Range 25, Aitkin County, Minnesota lying southwesterly of the southwesterly right-of-way line of the former Soo Line Railroad (also formerly known as the Minneapolis, St. Paul and Sault Ste. Marie Railway Company right-of-way) and lying southeasterly of the southeasterly right-of-way line of County State Aid Highway No. 5.

EXCEPTING THEREFROM THE FOLLOWING DESCRIBED PARCEL:

A tract of land located in the SW1/4 of NW1/4 of Section 26, Township 49, Range 25, and being more fully described as follows:

Commencing at the west quarter corner of said Section 26; thence South 0 degrees 00 minutes 00 seconds East (assumed bearing) on the West section line of said Section 26 for a distance of 82.20 feet; thence Northeasterly on the centerline of County State Aid Road 5 which is a curve concave to the southeast which is a 10 degree curve with a delta angle of 50 degrees 25 minutes 00 seconds for an arc length of 504.17 feet; thence North 50 degrees 25 minutes 00 seconds East on the centerline of said County Road No. 5 for a distance of 612.16 feet; thence South 44 degrees 30 minutes 10 seconds East and parallel to the westerly right-of-way of the Soo Line Railroad for a distance of 75.28 feet to a T-iron on the southerly right-of-way of said County Road 5, being the point of beginning; thence North 50 degrees 25 minutes 00 seconds East on the southerly right-of-way of said County Road 5 for a distance of 200.00 feet to a T-iron on the westerly right-of-way of the Soo Line Railroad; thence South 44 degrees 30 minutes 10 seconds East on the westerly right-of-way of the Soo Line Railroad for a distance of 61.08 feet to a T-iron; thence southeasterly on the westerly right-of-way of the Soo Line Railroad which is a curve concave to the northeast with a radius of 11,609.20 feet and a delta angle of 0 degrees 41 minutes 10 seconds for an arc length of 139.03 feet to a T-iron; thence South 50 degrees 25 minutes 00 seconds West parallel to the southerly right-of-way of said County Road 5 for a distance of 201.25 feet to a T-iron; thence North 44 degrees 30 minutes 10 seconds West for a distance fo 200.00 feet to the point of beginning.

## Proposed Easement

A 100.00-foot-wide strip of land for utility easement purposes over, under, and across the North Half of Section 26, Township 49 North, Range 25 West, Aitkin County, Minnesota, being 50.00 feet on each side of the following described centerline:

Commencing at the west quarter corner of said Section 26; thence North 00 degrees 48 minutes 19 seconds West, assumed bearing, along the west line of said Northwest Quarter, a distance of 158.53 feet to the Point of Beginning; thence North 23 degrees 57 minutes 31 seconds East, a distance of 166.33 feet; thence North 43 degrees 56 minutes 28 seconds East, a distance of 347.17; thence South 70 degrees 20 minutes 04 seconds East, a distance of 463.01; thence North 43 degrees 36 minutes 23 seconds East, a distance of 108.00 feet; thence North 43 degrees 28 minutes 13 seconds West, a distance of 179.15 feet and there terminating.

The sidelines of said easement are to be extended or shortened to terminate at the west line of said North Half of Section 26.



Prepared by: wsb

WSB Project No. 021637

Portage Lake 69-kV Transmission Easement Exhibit

ML-PP-420

Owner: Aitkin County

Aitkin County, Minnesota

| # | REVISION | DATE |
|---|---|---|
| 1 | | |
| 2 | | |
| 3 | | |

GRE Proj. No. 207328 5/02/2023

GREAT RIVER ENERGY

# EXHIBIT "B"

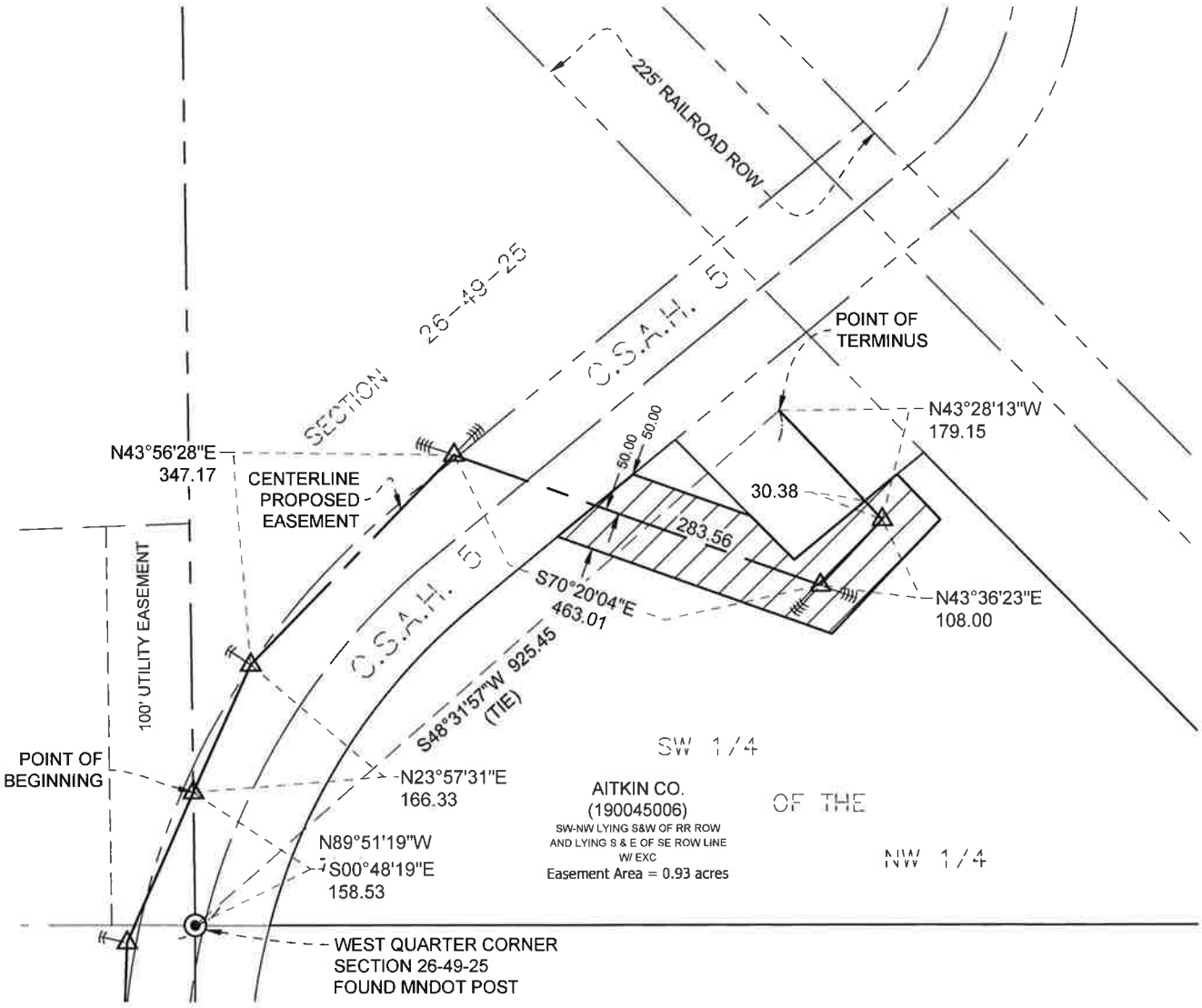


FOUND SECTION MONUMENT
FOUND IRON MONUMENT
ANGLE POINT
PERMANENT UTILITY EASEMENT AREA

Graphic Scale (feet)
0 200
1 inch = 200 feet

N

SHEET 2 OF 2

*Prepared by:*
wsb
WSB Project No. 021637

Portage Lake 69-kV Transmission
Easement Exhibit
ML-PP-420
Owner: Aitkin County
Aitkin County, Minnesota

| # | REVISION | DATE |
|---|---|---|
| 1 | | |
| 2 | | |
| 3 | | |

GRE Proj. No. 207328 5/02/2023

GREAT RIVER ENERGY.

**CERTIFIED COPY OF RESOLUTION OF COUNTY BOARD OF AITKIN COUNTY, MINNESOTA**

ADOPTED February 13, 2024

By Commissioner: xxx **20240213-xxx**

## Great River Energy Easement No. ML-PP-420

**WHEREAS,** Great River Energy has proposed Easement No. ML-PP-440 to facilitate construction of a portion of the Portage Lake 69-kV transmission project.

**NOW THEREFORE BE IT RESOLVED,** That the Aitkin County Board of Commissioners does hereby authorize the Aitkin County Board Chair to execute Easement No. ML-PP-420 for and on behalf of the County of Aitkin.

Commissioner xxx seconded the adoption of the resolution and it was declared adopted upon the following vote

xxx MEMBERS PRESENT All Members Voting xxx

**STATE OF MINNESOTA}**
**COUNTY OF AITKIN}**

I, Jessica Seibert, County Administrator, Aitkin County, Minnesota do hereby certify that I have compared the foregoing with the original resolution filed in the Administration Office of Aitkin County in Aitkin, Minnesota as stated in the minutes of the proceedings of said Board on the 13th day of February 2024, and that the same is a true and correct copy of the whole thereof.

**Witness my hand and seal this 13th day of February 2024**

Jessica Seibert
County Administrator

# Board of County Commissioners Agenda Request

**4A**
Agenda Item #

**Requested Meeting Date:** February 13, 2024

**Title of Item:** Revitalization Grant: Award funding

| | | |
|---|---|---|
| ☑ REGULAR AGENDA | **Action Requested:** | ☐ Direction Requested |
| ☐ CONSENT AGENDA | ☑ Approve/Deny Motion | ☐ Discussion Item |
| ☐ INFORMATION ONLY | ☐ Adopt Resolution (attach draft) | ☐ Hold Public Hearing* |
| | | **provide copy of hearing notice that was published* |

**Submitted by:**
Mark Jeffers

**Department:**
Administration

**Presenter (Name and Title):**
Mark Jeffers, Economic Development Coordinator

**Estimated Time Needed:**
5 minutes

**Summary of Issue:**

The Aitkin County Economic Development Committee has received and reviewed grant funding requests for the Revitalization Grant Program. Grant applications for all grants applications reviewed and grant award summary are included.

The Committee recommends and requests approval to award the following grant at this time:

AK's Barbershop $2,000.00

The purpose of this grant fund is to help support local businesses to upgrade/revitalize the outside presence of their business property in our community in an effort to drive economic growth. As business owners and members of our community, it is important that we establish and maintain an image of growth and success. The fund will help support upgrades of awnings, signage, outdoor aesthetics and general business image and appearance.

**Alternatives, Options, Effects on Others/Comments:**

**Recommended Action/Motion:**
Economic Development requests approval of a motion to award the recommended grants.

**Financial Impact:**
*Is there a cost associated with this request?* ☑ *Yes* ☐ *No*
*What is the total cost, with tax and shipping? $*
*Is this budgeted?* ☑ *Yes* ☐ *No* *Please Explain:*

This funding is budgeted through the ARPA funding.

Legally binding agreements must have County Attorney approval prior to submission.

# 2023 Revitalization Grant Program

| # | Applicant Name | Project Name | City | $ requested | $ Awarded |
|---|---|---|---|---|---|
| 1 | Gramma's Pantry/Beanery | Terrace Project | Aitkin | $ 5,000.00 | |
| 2 | Growth Innovations | Building painting | Aitkin | $ 12,814.68 | |
| 3 | Lowe Properties | awning replacement | Aitkin | $ 5,000.00 | $ 5,000.00 |
| 4 | Sam's Custom Meat Processing | Door replacement | Tamarack | $ 5,000.00 | $ 5,000.00 |
| 5 | Northland Hydraulic Services | sign replacement | Hill City | $ 10,000.00 | $ 5,000.00 |
| 6 | Sarah's Shining Star Daycare | sign replacement | McGregor | $ 5,000.00 | |
| 7 | The Locker Room | Patio construction (between Block North and The Locker Room) | Aitkin | $ 5,000.00 | $ 3,000.00 |
| 8 | Jaques Art Center | upgrade of doors | Aitkin | $ 1,020.00 | $ 1,020.00 |
| 9 | HOPE | Tree removal to add statue | | $ 5,000.00 | |
| 10 | Holy Family Catholic Church | upgrade of signage and siding | McGregor | $ 5,000.00 | |
| 11 | Roadside Market | new siding on retail building | Hill City | $ 5,000.00 | $ 5,000.00 |
| 12 | ASAP Towing | new lot upgrade | Aitkin | $ 5,000.00 | |
| | My Crafts & Things | awning replacement | Aitkin | $ 1,151.50 | $ 1,151.50 |
| | Smokey Jakes BBQ | awning replacement | Aitkin | $ 1,006.00 | $ 1,006.00 |
| 13 | Growth Innovations: Property 2, main street Aitkin | awning replacement | Aitkin | $ 1,520.75 | $ 1,521.00 |
| 14 | Village Pump Saloon | painting exterior of business | Tamarack | $ 4,600.00 | $ 4,600.00 |
| 15 | SB Pharmacy | Sealing and striping of parking lot | McGregor | $ 5,000.00 | |
| 16 | Round Lake Resort | new dock installation | McGregor | $ 5,000.00 | $ - |
| 17 | Sunny's | sign replacement | Hill City | $ 5,000.00 | $ 5,000.00 |
| 18 | City of Palisade | outside upgrade | Palisade | $ 5,000.00 | $ - |
| 19 | Ginger Marie's | awning installation | Aitkin | $ 5,000.00 | $ 2,000.00 |

| | | | | | |
|---|---|---|---|---|---|
| #1 ® | Gramma's Pantry/Beanery | Patio construction | Aitkin | $ 5,000.00 | $ 2,000.00 |
| 20 | Aitkin ALANO Society | Exterior building painting | Aitkin | $ 2,000.00 | $ - |
| 21 | Palisade One Stop | replace current roadside signage | Palisade | $ 1,500.00 | $ 3,000.00 |
| 22 | Angels of McGregor | roof replacement | McGregor | $ 5,000.00 | |
| 23 | Trails Inn Quadna Mountain | campground improvement | Hill City | $ 5,000.00 | |
| 24 | Hello Gorgeous | awning installation- new business | Aitkin | $ 712.50 | $ 712.50 |
| 25 | McGregor Home Center | exterior upgrades | McGregor | $ 5,000.00 | $ 5,000.00 |
| 26 | McGregor Baking Company | exterior upgrades | McGregor | $ 4,000.00 | $ 4,000.00 |
| 27 | Wilson and Associates (Am Fam) | front exterior upgrades | Aitkin | $ 5,000.00 | $ 3,094.43 |
| 28 | BarTopp Wash | exterior painting | McGregor | $ 3,150.00 | $ 3,150.00 |
| 29 | Crossroads Hotel | exterior painting | McGregor | $ 5,000.00 | $ 5,000.00 |
| 30 | Jack's Shack | roof top signage/ building removal | McGregor | $ 3,378.28 | $ 1,278.00 |
| 31 | Affordable Abodes LLC | awning replacement | Aitkin | $ 5,000.00 | |
| 32 | Big Tom's Diner | awning replacement | Aitkin | $ 2,812.00 | $ 2,812.00 |
| 33 | AK's Barbershop | awning replacement | Aitkin | $ 2,981.00 | $ 2,000.00 |
| | | | | $ 157,646.71 | $ 71,345.43 |

#38

# Application for Aitkin County Business Revitalization Grant Program 2023

1. Grant requests should be submitted by EMAIL to:
   mark.jeffers@co.aitkin.mn.us, subject line: Revitalization Grant 2023 or
   by mail to:
   Mark Jeffers
   Aitkin County Government Center,
   307 2nd Street NW, Room 316,
   Aitkin, MN 56431.
2. Funding recommendations will be considered at the regularly scheduled monthly meeting of the Aitkin County Economic Development Committee.
3. Committee recommendations will be submitted to the Aitkin County Board of Commissioners for final approval.

## APPLICANT INFORMATION

**PROGRAM INFORMATION**

**Business Name:** AKs Barbershop

**Address:** 122 Minnesota Ave North
Aitkin MN 56431

**Person in Charge of Project:** Tidholm Productions

**Organization Mailing Address (Street Name or P.O. Box or Route and Box # and City and Zip Code):**
18 and St NE
Aitkin MN 56431

**Contact Person's Phone #:** Anil Kermally (425)628-4664

**Contact Person's Email:** AKsBarbershop@gmail.com

**Description of your organization:** Barbershop

**Mission Statement of your organization:**

**FUNDING:**

Amount requested from Aitkin County $ ??

(Minimum $1000, maximum request is $5,000). The Economic Development Committee may recommend to the Board of Commissioners to increase or decrease the amount awarded at their discretion. The Aitkin County Board of Commissioners grants the final approval for funding.

Amount of the business' match $ 10-20%

Total projected budget $ 4,183.00 — $ 5,964.00 respectfully

**PROJECT DESCRIPTION: Be concise and complete; attach supporting information if needed.**

Replacement of weathered awning with new signage replacement.

**PROJECT BUDGET:** in the space below, provide a budget for the entire project.

| Category | Grant Funds | Applicant Funds | Total |
|---|---|---|---|
| | | | |
| | | | |
| | | | |
| | | | |
| | | | |
| | | | |
| | | | |
| | | | |
| | | | |
| TOTALS | | | |

**Will your organization accept a grant if it is partially funded?** yes!

Along with your application, please attach all documents that will assist the committee in their decision. Examples may include drawings or sketches of planned awning or signage upgrades, detailed quotes of work to be accomplished (if available).

Business Owner Signature:

Name _____ Date: 12/18/23

TIDHOLM Productions

**Printing ~ Signage ~ Promotional Items**

AK's Barber Shop
122 MN Ave N
Aitkin, MN 56431

December 18, 2023

We are pleased to submit the following "AK's New Exterior Awning" bid as requested, based on the specifications provided.

Exterior Awning Recover – Option 1

| | |
|---|---|
| Quantity | 1 |
| Style/Shape | Mansard |
| Length | 13'11" |
| Height | 72" |
| Projection | 36" |
| Face | 9" |
| Graphics | As per computer image<br>Customer to provide vectorized .eps file for custom artwork and logos |
| Lights | None |
| Eggcrating | Existing |
| Fabric | Jockey Red and Mediterranean Blue Sunbrella Acrylic Substrate |
| Frame | Existing |
| Completion | Re-Installed |
| Cost: | $4,183.00* |

Striped Option – Option 2

| | |
|---|---|
| Fabric | Mediterranean Blue Sunbrella Acrylic Substrate with a Cadet Gray slope with pressed vinyl stripes |
| Cost: | $5,964.00* |

*Note: It is understood all data, electronic files, art and copy needed to complete job will be included. Graphic design services if not listed above and would be billed at $56.00 per hour actual. 50% deposit is due upon acceptance of bid amount. Bid good for 30 days from above date.

If you have any questions or need additional information, please feel free to call,

Jeff Tidholm

18 2nd St NE ~ P.O Box 251, Aitkin, MN 56431
Office: 218.928.8888 ~ Printing@TidholmProductions.com ~ TidholmProductions.com

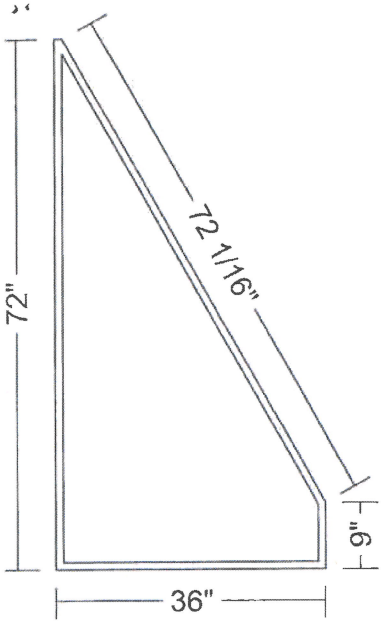


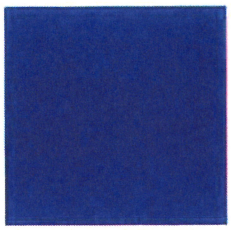

ENDS

**OPTION 1:**
STYLE: RECOVER
QUANTITY: 1
MATERIAL: MEDITERRANEAN BLUE SUNBRELLA
GRAPHICS: PRESSED VINYL:
TOMATO RED 7725-13
WHITE 7725-10
LIGHTS: NONE
DIFFUSION PANELS: EXISTING
VALANCE: NONE
ENDS: CLOSED
POWER: NONE

**NEED VECTORIZED ARTWOR**

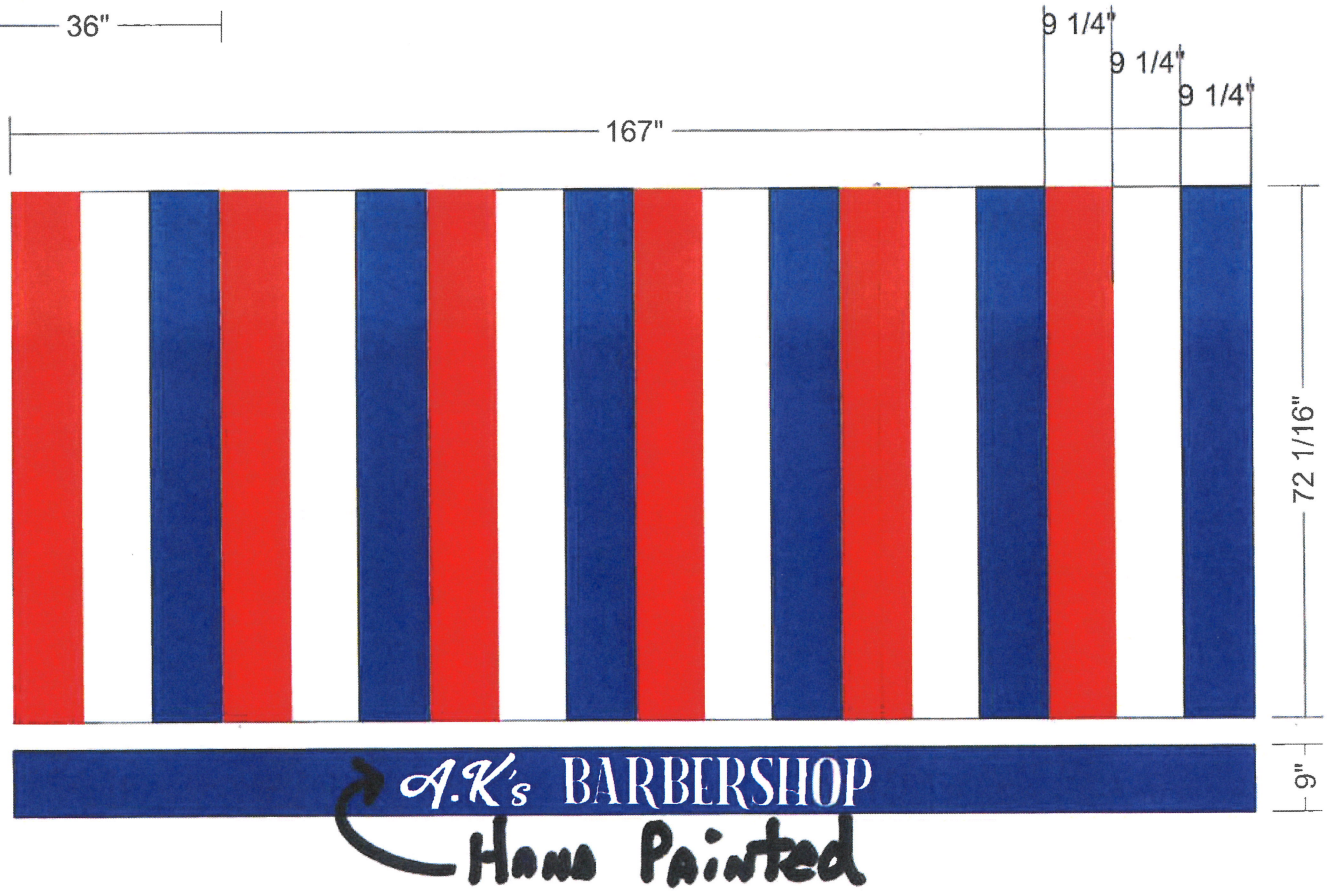

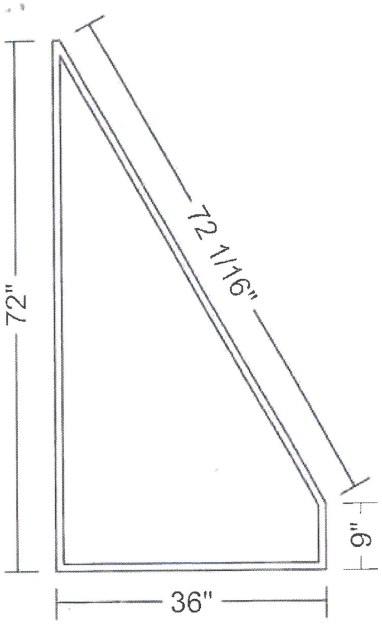


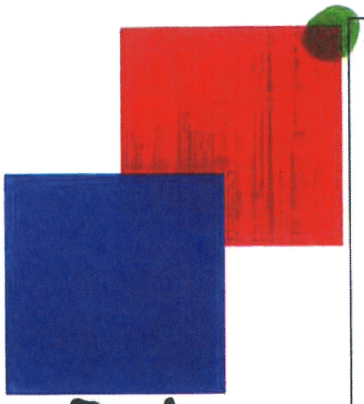

END'S

OPTION 2:
STYLE: RECOVER
QUANTITY: 1
MATERIAL: JOCKEY RED SUNBRELLA
MEDITERRANEAN BLUE SUNBRELL
GRAPHICS: PAINTED WHITE
LIGHTS: NONE
DIFFUSION PANELS: EXISTING
VALANCE: NONE
ENDS: CLOSED
POWER: NONE

**NEED VECTORIZED ARTWOR**

A.K's BARBERSHOP
A.K's
BARBERSHOP

A.K's BARBERSHOP
A.K's
BARBERSHOP

# Board of County Commissioners Agenda Request

**4B**
Agenda Item #

**Requested Meeting Date:** February 13, 2024

**Title of Item:** Business Development & Recreation Grant: Award funding

| | |
|---|---|
| ☑ REGULAR AGENDA<br>☐ CONSENT AGENDA<br>☐ INFORMATION ONLY | **Action Requested:**<br>☑ Approve/Deny Motion<br>☐ Adopt Resolution (attach draft)<br>☐ Direction Requested<br>☐ Discussion Item<br>☐ Hold Public Hearing*<br>**provide copy of hearing notice that was published* |
| **Submitted by:**<br>Mark Jeffers | **Department:**<br>Administration |
| **Presenter (Name and Title):**<br>Mark Jeffers, Economic Development Coordinator | **Estimated Time Needed:**<br>5 minutes |

**Summary of Issue:**

The Aitkin County Economic Development Committee has received and reviewed grant funding requests for the Business Development & Recreation Grant Program. Grant applications and grant award summary are included.

The Committee was unanimous on the recommendation. The Committee recommends and requests approval to award the following grant at this time:

Nature Rocks, Long Lake Foundation $2,000.00

The purpose of this grant fund is to leverage county funds, private funds and volunteer efforts to increase small business development activities in Aitkin County, with an emphasis on increasing sustained tourism and recreation activities. Several organizations may submit a single application or organizations may apply individually. Organizations need only to commit one hundred dollars ($100) in good faith to ensure commitment to the grant request. The Aitkin County Board of Commissioners, have approved funding to be used to directly impact the Community of Aitkin County by executing the Aitkin County Business Development & Recreation Grant.

**Alternatives, Options, Effects on Others/Comments:**

**Recommended Action/Motion:**

Economic Development requests approval of a motion to award the recommended grants.

**Financial Impact:**

*Is there a cost associated with this request?* ☑ *Yes* ☐ *No*

*What is the total cost, with tax and shipping? $*

*Is this budgeted?* ☑ *Yes* ☐ *No* *Please Explain:*

This funding is budgeted through the ARPA funding.

Legally binding agreements must have County Attorney approval prior to submission.

# Application for Aitkin County Business Development & Recreation Grant Program

**January 1, 2024 - December 31, 2024**

1. Grant requests should be submitted by EMAIL to:
   mark.jeffers@co.aitkin.mn.us, subject line: BD&R2024 or
   by mail to:
   Mark Jeffers
   Aitkin County Government Center
   307 2nd Street NW, Room 316
   Aitkin, MN 56431
2. Funding recommendations will be considered at the regularly scheduled monthly meeting of the Aitkin County Economic Development Committee. Application deadline is **May 31, 2024.**
3. Committee recommendations will be submitted to the Aitkin County Board of Commissioners for final approval.

## APPLICANT INFORMATION

**PROGRAM INFORMATION**

**Project Name:** Nature Rocks! A Fundraiser for Conservation

**Date(s) of Program:** Friday, June 21, 2024

**Location of Program:** Aitkin County Fairgrounds

**Organization/Community Name:** Long Lake Foundation benefiting the Long Lake Conservation Center

**Person in Charge of Project:** Bob Marcum, President  Dave McMillan, Manager LLCC

**Organization Mailing Address (Street Name or P.O. Box or Route and Box # and City and Zip Code):**

28952 438th Ln  Palisade, MN 56469

**Contact Person's Phone #:** 218-768-4653

**Contact Person's Email:** rmarcum@llcfoundation.org; dave@longlakecc.org

**Description/focus/purpose of your organization:**

The Long Lake Conservation Foundation is 100% volunteer-operated. We see value in providing people, especially youth, with resources to learn about nature and understand the importance of conservation. The foundation's purpose is to raise, receive, and appropriate funds with a goal to enhance environmental education at Long Lake Conservation Center.

The center is focused on living connected to the natural world. They inspire a deep appreciation of nature through hands-on, discovery based learning. Those that experience Long Lake Conservation Center develop skills and an appreciation for the natural world around them in the hopes of building a lifelong stewardship of the environment.

**FUNDING:**

Amount requested from Aitkin County  $ 2,000

(Minimum $100.00, maximum request is 2,000.00). The Economic Development Committee may recommend to the Board of Commissioners to increase or decrease the amount awarded at their discretion. The Aitkin County Board of Commissioners grants the final approval for funding.

Amount of your organization's match  $2,000

Total projected budget  $37,963

**PROJECT/EVENT DESCRIPTION: Be concise and complete; attach supporting information if needed.**

Nature Rocks! A Concert for Conservation is a scholarship fundraising event headlined by the Kentucky Headhunters with Pert Near Sandstone and Whiskey River. This is the major summer fundraising event for the Long Lake Conservation Foundation. All profits from this event will go to support Long Lake Conservation Center so that youth to attend Outdoor School and summer camp. This is the concert's third year. We will continue to support our local community through utilizing area contractors and vendors. You can learn more about Nature Rocks at www.naturerocksconcert.com.

**What do you hope to accomplish, how it will be done and specifically how the grant funds will be used?**

There are a number of goals for this event. The primary goal is to raise money in support of Long Lake Conservation Center's environmental education mission. We are selling tickets to this event, seeking sponsors, grants, building local partnerships, and selling t-shirts and concessions. The budgeted projection is to raise $20,000. This will be distributed to up to 3,500 youth during the 2023-24 school year. Other goals include building awareness for Long Lake Conservation Center's environmental education mission, and being an active part of life in Aitkin County, supporting its burgeoning entertainment-based brand. The grant funds will be used to execute the concert, including paying for band, stage, facilities, port-a-potties, media and incidentals. The event will be marketed on radio the Hubbard radio network and KKIN, press releases, paid newspaper advertisement, social media posts and paid digital media.

**Explain how your project will bring visitors to or provide a positive and sustainable economic impact on Aitkin County.**

This is the third year of Nature Rocks. We have partnered with Huff Entertainment Solutions to take this event to a new level, maximizing attendance and community involvement. Huff Entertainment projects an attendance of between 1,000 and 2,000 people for this show. Area businesses, including bars, restaurants and hotels directly benefitted from the concert. The event also directly paid numerous Aitkin County businesses, including Timber Septic, Hometown Lumber and Antoine Electric. Other businesses, including Block North and others, profited from providing services at the concert. We estimate that approximately 400 people from outside of the County will attend the concert. At previous events, we heard numerous comments about how "cool" Aitkin is. We anticipate that this year's event will similarly benefit Aitkin County.

**List target audience:**

The primary target markets are Aitkin, Brainerd, Grand Rapids, Duluth, St. Cloud and, to a lesser degree, the Twin Cities metro area.

4. **PROJECT BUDGET:** in the space below, provide a budget for the entire event.

| Category | Grant Funds | Applicant Funds | Total |
|---|---|---|---|
| Bands | $0 | $28,250 | $28,250 |
| Sound, lights and stage | $1,000 | $2,700 | $3,700 |
| Huff Entertainment | $0 | $1,413 | $1,413 |
| Fairground Rental | $500 | $500 | $1,000 |
| Advertising | $0 | $1,500 | $1,500 |
| Port-a-Potties | $500 | $500 | $1,000 |
| Culligan Water Station | $0 | $100 | $100 |
| Insurance | $0 | $500 | $500 |
| Miscellaneous/incidentals | $0 | $500 | $500 |
| TOTALS | $2,000 | $35,963 | $37,963 |

Contact Signature:

Name Bob Mc David Mc Millan Date: 12-15-23

**Business Development and Recreation Grant**

| Year | # | Facility Name | Project Name | City | $ requested | $ Awarded |
|---|---|---|---|---|---|---|
| 2024 | 1 | Long Lake Foundation | Nature Rocks | Palisade | $ 2,000 | $ 2,000 |
| | 2 | Growth Innovations/Aitkin, McGregor Chamber | Workforce Summit | County | $ 2,000 | |
| | 3 | Habitat for Humanity | Toolin' Tour | County | $ 1,200 | |
| | 4 | | | | | |
| | 5 | | | | | |
| | 6 | | | | | |
| | 7 | | | | | |
| | 8 | | | | | |
| | 9 | | | | | |
| | 10 | | | | | |
| | 11 | | | | | |
| | 12 | | | | | |
| | 13 | | | | | |
| | 14 | | | | | |
| | 15 | | | | | |
| | 16 | | | | | |
| | 17 | | | | | |
| | 18 | | | | | |
| | | | | | | |
| | | | | | | |
| | | | | | $ 5,200 | $ 2,000 |

$ 18,000.00

# Board of County Commissioners Agenda Request

**5A**
Agenda Item #

**Requested Meeting Date:** February 13, 2024

**Title of Item:** Land Department 2023 Budget Review

| | |
|---|---|
| ☑ REGULAR AGENDA<br>☐ CONSENT AGENDA<br>☐ INFORMATION ONLY | **Action Requested:**<br>☐ Approve/Deny Motion<br>☐ Adopt Resolution (attach draft)<br>☐ Direction Requested<br>☑ Discussion Item<br>☐ Hold Public Hearing*<br>**provide copy of hearing notice that was published* |
| **Submitted by:**<br>Dennis (DJ) Thompson | **Department:**<br>Land |
| **Presenter (Name and Title):**<br>Dennis (DJ) Thompson, Land Commissioner | **Estimated Time Needed:**<br>10 Minutes |

**Summary of Issue:**

I would like to present to the Board a review of the Land Department's 2023 budget.

**Alternatives, Options, Effects on Others/Comments:**

**Recommended Action/Motion:**

**Financial Impact:**

*Is there a cost associated with this request?* ☐ *Yes* ☑ *No*

*What is the total cost, with tax and shipping? $*

*Is this budgeted?* ☐ *Yes* ☐ *No* *Please Explain:*

Legally binding agreements must have County Attorney approval prior to submission.

# AITKIN COUNTY LAND DEPARTMENT

2023 Budget Review
February 13, 2024

# Accounts

CONSOLIDATED CONSERVATION (CON CON)

FORFEITED TAX SALES (FTS)

RESOURCE DEVELOPMENT

SURVEY & GIS

PARKS & TRAILS

# Con Con

| | 2023 Budgeted | 2023 Actual | Difference |
|---|---|---|---|
| Revenue | $ 317,500 | $ 336,874 | + $19,374 |
| Expenses | $ 543,406 | $ 449,941 | - $93,465 |

- $225,906 = Planned use of fund balance
- $113,067 = Actual use of fund balance
- End of the year account balance = $657,668
- County policy is to maintain an account balance of at least $500,000

# Forfeited Tax Sales

| | 2023 Budgeted | 2023 Actual | Difference |
|---|---|---|---|
| Revenue | $ 1,500,000 | $ 1,511,575 | + $11,575 |
| Expenses | $ 865,066 | $ 837,978 | - $27,088 |

- Account is zeroed out every year with net proceeds apportioned out
- For 2023, apportioned $870,310 which was the net proceeds from 2022
- Ten-year average gross from FTS account is $1,628,237
- Report on apportionment for 2023 revenue will be available in the coming months

# Resource Development

| | 2023 Budgeted | 2023 Actual | Difference |
|---|---|---|---|
| Revenue | $ 449,200 | $ 628,693 | + $179,493 |
| Expenses | $ 587,219 | $ 673,746 | + $86,527 |

- $138,019 = Planned use of fund balance
- $45,053 = Actual use of fund balance
- End of the year account balance = $511,710
- Unexpected expenses came from the purchase of two trucks in 2023 that were budgeted for in 2022
- Excess revenue was the result of higher than budgeted apportionment from 2022.

# Survey & GIS

| | 2023 Budgeted | 2023 Actual | Difference |
|---|---|---|---|
| Revenue | $ 465,312 | $ 459,848 | - $5,464 |
| Expenses | $ 460,856 | $ 459,848 | - $1,008 |

- Account is budgeted to break even, half from Con Con and half from Resource Development
- 2020 was the last year levy funds were used for Survey and GIS
- Had a retirement in 2023 and that position was not replaced

# Parks & Trails

| | 2023 Budgeted | 2023 Actual | Difference |
|---|---|---|---|
| Revenue | $ 672,944 | $ 683,849 | + $10,905 |
| Expenses | $ 747,950 | $ 830,971 | + $83,021 |

- Money for the Grant in Aid (GIA) program and bonding money for Mille Lacs ATV Trail flow through this account
- 2023 budgeted transfer to LLCC will be completed once all reimbursements from work completed in 2023 are received (GIA, bonding, and disaster relief)
- GIA and bonding money are reimbursement based

MISSISSIPPI RIVER
PUBLIC WATER ACCESS
DEVELOPED BY
IN COOPERATION WITH

# Board of County Commissioners Agenda Request

**5B**
Agenda Item #

**Requested Meeting Date:** February 13, 2024

**Title of Item:** Revised LLCC Manager Job Description

| | |
|---|---|
| ☑ REGULAR AGENDA<br>☐ CONSENT AGENDA<br>☐ INFORMATION ONLY | **Action Requested:**<br>☑ Approve/Deny Motion<br>☐ Adopt Resolution (attach draft)<br>☐ Direction Requested<br>☐ Discussion Item<br>☐ Hold Public Hearing*<br>**provide copy of hearing notice that was published* |
| **Submitted by:**<br>Dennis (DJ) Thompson | **Department:**<br>Land |
| **Presenter (Name and Title):**<br>Dennis (DJ) Thompson, Land Commissioner | **Estimated Time Needed:**<br>5 Minutes |

**Summary of Issue:**

Prior to Covid, the Manager/Director of Long Lake Conservation Center was required to live onsite for the convenience of the employer (Aitkin County). There are two residential houses at Long Lake. Over the life of the Center, there have been different management models. When the center reopened after Covid, a management model with one Manager/Director was developed along with a new job description for that position. This job description did not require that the manager live onsite. This has worked out okay but it is not ideal. For a multitude of reasons, not the least of which is always having a 24 hour presence on campus, I would like to revise the current job description for the LLCC Manager to require that they live onsite.

The revised language has been reviewed by HR and the current LLCC Manager is supportive of the new requirement.

**Alternatives, Options, Effects on Others/Comments:**

**Recommended Action/Motion:**

Motion to adopt the updated LLCC Manager job description as presented requiring the LLCC Manager to live onsite for the convenience of the employer. (A redlined copy is attached.)

**Financial Impact:**

*Is there a cost associated with this request?* ☐ *Yes* ☑ *No*

*What is the total cost, with tax and shipping? $*

*Is this budgeted?* ☐ *Yes* ☐ *No* *Please Explain:*

Legally binding agreements must have County Attorney approval prior to submission.

Aitkin County

Est. May 23, 1857

*Position Description*

# LLCC MANAGER

**Department** Land Department
**Location** Long Lake Conservation Center
**Grade** Grade 12
**Reports to** Land Commissioner
**FLSA Status** Exempt
**Union Status** Non-union

**Final Appointing Authority**
This position shall not be filled until final approval of the County Administrator. All offers of employment are made in writing by the Human Resources Department.

**Job Summary**
To manage, plan, evaluate and supervise all functions of the Long Lake Conservation Center and to develop and implement all marketing and communication efforts conducted on behalf of the organization, consistent with its mission and goal of being a self-funded organization.

**Supervision Received**
Employees working in this job class work under administrative direction and are free to plan, develop, and organize all phases of the work necessary for its completion within broad program guidance. Generally, they develop and utilize procedures and methods that do not conflict with major organization policies.

**Supervision Exercised**
Manages the Instruction Coordinator who oversees the LLCC Education Department and staff, the Food Service Coordinator who oversees the kitchen staff, and the Maintenance Coordinator who oversees the maintenance staff. Also directly supervises clerical support staff and volunteers.

Carries out supervisory responsibilities in accordance with the organization's policies and applicable laws. Responsibilities include planning, assigning, and directing work; appraising performance; addressing complaints; training and rewarding employees. Responsibilities also include, in collaboration with the Human Resources Department, interviewing, hiring, implementing performance improvement plans, disciplining employees, suspension, termination, and resolving grievances.

**Essential Functions**
This position description is not intended to be all-inclusive. Employee may perform other essential and nonessential functions as assigned or apparent to meet the ongoing needs of the department and organization. Regular attendance is an essential requirement of this position.

1. Marketing
    a. Creates a marketing plan to increase awareness, name recognition, brand recognition, and reputation in and out of the community. Defines and revitalizes the mission statement to

more clearly reflect the activities, programming, and purpose of the facility, and to protect the current marketplace position and direction of the organization.

b. Recruits schools and other client groups. Identifies and secures alternative programming and new client markets, including but not limited to school, summer camp, adult/family, and community education programming, and county park functions. Explores new programming opportunities to determine feasibility, develops contact information, secures training, assists in the implementation of new legislation, and identifies key partnerships that need to be cultivated and nourished for the good of LLCC now and in the future.
c. Employs bold marketing strategies to enhance the image of LLCC, assists in modernizing current programming and develops future programming to ensure future sustainability and profitability.
d. Unites LLCC foundation members, Natural Resource Advisory Committee members, County Commissioners, LLCC staff and management team, clients, business owners, volunteers, and the public who can promote and support the facility's goals and objectives. Solicits advertising distributed publications, links on the website, and other communication opportunities.
e. Creates an Awareness/Public Relations Campaign including research, adaptation, implementation, and evaluation. Includes identifying the target audience, consistent branding, and building relationships. Takes affordability into account.
f. Updates and maintains consistent branding on items that are sent out into the community from LLCC, including but not limited to brochures, rack cards, employee business cards and other printed materials. Utilizes added color, crisp photographs, and includes a clearly stated mission and logo. Utilizes volunteers and LLCC supporters to assist with distribution.
g. Maintains monthly contact with media outlets. Advertises and creates a consistent presence listing activities and happenings at LLCC, including in newspapers, on community calendars, website and social media outlets, and disperses to radio and television stations citing events at the facility. Speaks as a guest on KKIN radio community connection show at least once per quarter, or as frequently allowed by KKIN. May also speak on local radio and TV promoting events at the facility when the opportunity arises. Creates and distributes press releases describing the recaps of events and activities.

2. General Business Management
   a. Develops and recommends long- and short-range objectives, policies and plans designed to produce the most profitable results attainable.
   b. Leads the organization and fulfills the goals which Aitkin County has set forth for LLCC.
   c. Prepares for the future sustainability of the facility by creating a solid foundation for growth and continued success by exploring new markets, cultivating a more active Foundation to establish a sustainable base, researching grant and scholarship opportunities for new and existing clients, marketing to more schools, developing a strategic plan for the future, recommending additional staff to accommodate new programming, providing staff training in outreach/communications, social media, writing blogs, etc.
   d. Coordinates activities in connection with renaming the facility so the name accurately describes what happens at LLCC, creating a new logo, and installing destination signage and billboard advertising.

e. Coordinates Web design and updates, creates brochures, promotes regular facility use, community involvement, and performs public relations activities, namely managing the flow of information between LLCC and the public. Improves LLCC's online presence, automates internal forms and processes, establishes online enrollments and registration, enhances technology, and coordinates staff technological training.
f. Utilizes multiple social media outlets (i.e., Facebook, Twitter, YouTube, Flickr, etc.) and the website to build awareness, strengthen relationships with clients, prospects, and influencers, better understand customers, improve customer service, identify new programming or service ideas, increase website traffic, improve search engine rankings, and generate organizational growth. Creates or coordinates preparation of online newsletters and blogs, videos, photos, and audio. Maintains current information on all sites.
g. Cultivates a strong relationship with the surrounding local communities to show a connection and willingness to be involved, and in turn creating an opportunity for the community to take ownership and pride in the facility. Increases LLCC visibility by speaking year round at civic organizations, town hall meetings, city meetings, county meetings, Chambers of Commerce functions, mayoral meetings, clubs, and community gatherings.
h. Establishes a volunteer pool that can be utilized for a variety of tasks, including support for family activities held at LLCC throughout the year.
i. Annually performs a competitive analysis to gather information about competitors and other RELC services and prices, as well as to assess LLCC's strengths and weaknesses in the market. Competes vigorously, but in a spirit of fair play, with respect for competitors. Performs research related facility improvements and other recreational offerings that may set LLCC apart from the competition at an advantage. Strives to meet the needs of the new generation of students, taking into consideration K-12, parents, teachers, as well as meeting, event, and special occasion planners. [Currently there are six Residential Environmental Learning Centers in Minnesota. Eagle Bluff, LLCC, Laurentian, Wolf Ridge, Osprey Wild, and Deep Portage.]
j. Oversees broad educational programming activities, ensuring fun, interactive, and challenging educational programs that incorporate the latest developments and trends intended to retain current student's focus and attention. Authorizes new recreational activities and programs focused on meeting educational standards set forth by law, focusing on curricular areas such as math, science, engineering, and technology, yielding greater potential for funding possibilities. Maintains LLCC's accreditation as a Special Purpose School.
k. Ensures operational efficiency of the building maintenance and food service programs to make certain safe, quality services and goods are provided at the lowest possible cost. Ensures all facilities meet applicable codes and safety requirements.
l. Strengthens the LLCF Foundation by recruiting board members with strong connections respective to their communities, both within Aitkin County and outside of the greater Aitkin County area who have a keen interest in environmental education, who are exceptional at asking people for support, and who have effective fundraising experience. Coordinates periodic board member training to ensure quality skill development over the long term.

3. Financial
   a. Strengthens future sustainability by securing additional and continual funding and support for the facility and develops a stronger and more active LLCF Foundation Board to support the

mission, goals, and purpose of the facility. The LLCC Foundation is designated as a 501(c)3 nonprofit organization. Builds a strong relationship with grant writing and other foundations that support and help fund teachers and schools and outdoor learning.

b. Submits realistic budgets, as required, reflecting the anticipated income and/or expenditures of the organization; administers activities within approved budgets. Provides a quarterly financial report and presentation to the County Board of Commissioners concerning programming, facilities, and general operations.
c. Organizes LLCC fundraising campaigns.

4. Personnel
   a. Assigns responsibility clearly so that staff know what they are expected to do, the extent of their authority, and the standards by which they will be evaluated; provides adequate guidance, counsel and supervision but gives staff sufficient authority to carry out their assignments and make decisions.
   b. Establishes and maintains regular two-way communications with all staff on policies, procedures or changes; holds regular meetings with staff; keeps them informed and gives them an opportunity to bring up matters which concern them; serves as a good source of information about LLCC and a good listener when employees present questions, problems or ideas.
   c. Adheres to collective bargaining agreements, county policies and procedures, and applicable laws, including timely/accurate reporting and consistent/uniform administration of EEO, FLSA, FMLA, ADA, Workers' Compensation and Return to Work programs, in close collaboration with the Human Resources Department. Completes departmental new hire orientations promptly and staff performance appraisals in accordance with county policy.
   d. Conducts business in accordance with the Open Meeting law.
   e. Serves as the Minnesota Government Data Practices Act Responsible Authority at LLCC. Appropriately responds to requests for government data. Maintains data in accordance with records retention schedules.
   f. Coordinates annual fire, tornado, and emergency practice drills at LLCC.
   g. Attend meetings, conferences, and continuing education courses as needed.

- Performs other related duties as assigned or apparent.

**Minimum Qualifications**

Requires a Bachelor's degree in Marketing (preferred), Business Management, Communications, Environmental and Technological Studies, or a related field, plus three (3) or more years related experience; or an equivalent combination of education and experience sufficient to perform the essential functions of the position. Educational/teaching background beneficial. Valid Minnesota driver's license.

Superior oral and written communication skills, public speaking skills, advanced technology skills, and a very strong work ethic are required. Prior marketing and fundraising experience is beneficial. Must be able to work flexible hours, including some evenings and weekends.

Employment reference checks and a criminal background check, including fingerprinting, will be performed as part of the pre-employment process.

~~On-site housing is an option for incumbent, spouse, and child(ren), if desired. This is voluntary. If interested, candidates may inquire about details at time of interview.~~
LLCC Manager is required to live onsite for the convenience of the employer. Manager will be required to perform property related tasks at LLCC. This includes but is not limited to being "on call" for LLCC emergencies in the evenings and weekends, responding to alarms, evening and weekend assistance with visitors and non-school groups, routine inspections of campus and buildings, checking heating systems, firing and stoking the wood stoves, tending to the chef's garden and bee hives, collecting maple sap, weekend snow removal, and other duties as assigned. Year-round occupancy and presence at LLCC increases campus security and dramatically reduces response time to emergencies.

**Knowledge, Skills, and Abilities Required**

Knowledge of:

1. County and departmental policies, procedures, and practices.
2. Knowledge of Federal, State, and local laws, rules, and regulations relevant to the work performed in this position.
3. Considerable knowledge of current business management and marketing principles and practices, including advanced knowledge of technology and social media outlets used today.

Skill in:

1. Communication and interpersonal skills as applied to interaction with coworkers, supervisor, and the general public sufficient to exchange or convey information and to receive work direction.
2. Leadership skills that include communication, marketing, promotion, and accessibility.
3. Grant writing and fundraising skills and techniques sufficient to obtain revenue to supplement operations.
4. Superior oral and written communication skills.
5. Basic accounting skills sufficient to prepare and monitor the annual budget.
6. Preparing and making presentations to small and large groups.
7. Reading, writing, and speaking English proficiently.
8. Organizing and prioritizing work.

9. Typing skill sufficient to complete 35 net words per minute or higher. Up-to-date computer and technology skills sufficient to produce correspondence, create interactive forms, professional brochures, spreadsheets, perform internet research, efficiently utilize a variety of social media outlets for marketing purposes, teleconferencing, video conferencing, learn new software quickly and adapt to ever-evolving technology.

Ability to:

1. Present a positive attitude in the workplace, promote a spirit of teamwork and cooperation, and be able to treat all county staff and guests with respect, honesty, and consideration.
2. Establish and maintain effective working relationships with coworkers, supervisors, subordinates, and a willingness to get involved with the community and small businesses to work together for the benefit of all.
3. Must be able to travel and work in excess of standard hours when necessary, as well as be able to operate a vehicle safely in all types of weather.
4. Strong self-initiative and the ability to work independently.
5. Maintain confidentiality.

**Language Skills**
Ability to read, analyze, and interpret general business periodicals, professional journals, technical procedures, financial reports, legal documents, or governmental regulations. Ability to write reports, business correspondence, and procedure manuals. Ability to respond to common inquiries or complaints from customers, regulatory agencies, or members of the business community. Ability to write speeches and articles for publication that conform to prescribed style and format. Ability to effectively present information to top management, public groups, and/or governing boards.

**Mathematical Skills**
Ability to add, subtract, multiply, and divide in all units of measure, using whole numbers, common fractions, and decimals. Ability to compute rate, ratio, and percent and to draw and interpret bar graphs. Ability to calculate figures and amounts such as discounts, interest, and volume.

**Reasoning Skills**
Ability to solve practical problems and deal with a variety of concrete variables in situations where only limited standardization exists. Ability to interpret a variety of instructions furnished in written, oral, diagram, or schedule form.

**Computer Skills**
To perform this job successfully, an individual should be proficient at using the following:

County Payroll Software/E-time, Microsoft Word, Excel, Outlook, PowerPoint, Publisher, Internet, Facebook, Twitter, YouTube, Flickr, and other job-related programs and software.

**Ability to Travel**

Occasional travel in and out of Aitkin County is required for attending conferences, meetings, and when visiting other sites (schools, potential clients, etc.).

**Competencies**
To perform the job successfully, an individual should consistently demonstrate the following competencies (definitions attached or available upon request):

Ethics, attendance/punctuality, safety and security, dependability, analytical, design, problem solving, project management, technical skills, customer service, interpersonal skills, oral communication, written communication, teamwork, change management, delegation, leadership, managing people, quality management, business acumen, cost consciousness, diversity, organizational support, judgment, motivation, planning/organizing, professionalism, quality, quantity, adaptability, initiative, strategic thinking, visionary leadership, innovation, flexibility, and crisis management.

**Work Environment**
The noise level in the work environment is usually quiet to moderate.

**Equipment and Tools**
Computer, copier, fax, telephone, printer, 10-key calculator, shredder, county-owned vehicles, and personal vehicle (requires proof of insurance on file). May also use a variety of recreational and educational tools and equipment.

**Physical Activities/Requirements**
Climbing, balancing, stooping, kneeling, crouching, reaching, standing, walking, pushing, pulling, lifting, carrying, use of fingers, grasping, talking, hearing, seeing, and repetitive motions. Must have the ability to lift and/or carry up to 30 pounds.

While performing the duties of this job, the employee performs light work, exerting up to 30 pounds of force occasionally, and/or up to 10 pounds of force frequently, and/or a negligible amount of force constantly to move objects.

Working safely is a condition of employment. Aitkin County is a drug-free workplace.

**Disclaimer**
The above statements are intended to describe the general nature and level of the work being performed by employees assigned to this job classification. This is not an exhaustive list of all duties and responsibilities. Aitkin County reserves the right to amend and change responsibilities to meet organizational needs as necessary. This job description does not constitute an employment agreement between the employer and employee.

**Reasonable Accommodation Notice**
The County is an Equal Opportunity Employer. In compliance with the Americans with Disabilities Act, the County will provide reasonable accommodations to qualified individuals with disabilities and

encourages both prospective and current employees to discuss potential accommodations with the employer.

2/5/2024

---

***Our Vision**: We strive to be a county of safe, vibrant communities that place value on good stewardship of local resources.*
***Our Mission**: Aitkin County's mission is to provide outstanding service in a fiscally responsible manner through innovation and collaboration with respect for all.*
***Our Core Values**: Collaboration, Innovation, Integrity, People-Focused, Professionalism*

# Board of County Commissioners Agenda Request

**5C**
Agenda Item #

**Requested Meeting Date:** February 13, 2024

**Title of Item:** LLCC Residential House Lease

| | | |
|---|---|---|
| ☑ REGULAR AGENDA | **Action Requested:** | ☐ Direction Requested |
| ☐ CONSENT AGENDA | ☑ Approve/Deny Motion | ☐ Discussion Item |
| ☐ INFORMATION ONLY | ☐ Adopt Resolution (attach draft) | ☐ Hold Public Hearing* |
| | **provide copy of hearing notice that was published* | |

| | |
|---|---|
| **Submitted by:** Dennis (DJ) Thompson | **Department:** Land |
| **Presenter (Name and Title):** Dennis (DJ) Thompson, Land Commissioner | **Estimated Time Needed:** 5 Minutes |

**Summary of Issue:**

Dave McMillan, LLCC Manager, will be moving into one of the residential houses at Long Lake Conservation Center. Required rent will be $1,200/month plus utilities.

The lease has been reviewed by the County Attorney.

**Alternatives, Options, Effects on Others/Comments:**

**Recommended Action/Motion:**

Motion to approve entering into a Lease Agreement with the LLCC Manager for the rental of one of the residential houses at Long Lake Conservation Center.

**Financial Impact:**

*Is there a cost associated with this request?* ☐ *Yes* ☑ *No*

*What is the total cost, with tax and shipping? $*

*Is this budgeted?* ☐ *Yes* ☐ *No* *Please Explain:*

Legally binding agreements must have County Attorney approval prior to submission.

# RESIDENTIAL HOUSE LEASE AGREEMENT
# DIRECTOR'S RESIDENCE

## Authorized Rental Agent

Aitkin County (hereinafter Management) is acting as authorized rental agent and property manager for: Long Lake Conservation Center (hereinafter Property Owner) and is authorized to accept service of process at Government Center, 307 2nd Street NW, Room 312, Aitkin, MN 56431 and to give receipts for payments, notices, and demands. Aitkin County hereby agrees to lease to Resident the Described Property under the Terms and Conditions, Agreements, Additional Sheets, and Addendums listed below.

Management Contact Person: Dennis Thompson, Land Commissioner, 502 Minnesota Avenue N., Aitkin, MN 56431. Email: dennis.thompson@co.aitkin.mn.us Phone: 218-927-7364

## Landlord and Tenant agree to the following terms.

**Tenants:** (Each adult occupant, other than a protected person, must sign this Lease as a "Tenant")

_____

**Other Occupants:** (List children and protected persons)

_____

**Landlord:** Aitkin County

The **Premises** ("Premises") is located at: 28952 438th Lane, Palisade, MN. 56469

**Term of Lease:** Month to Month

**Lease Start Date:** _____ **Lease End Date:** (if known) _____

**Monthly Rent:** $1,200.00

**Security Deposit:** $1,200.00

**Late Fee:** $50.00

**Other Charges:** (specify) _____

**Rent Prorated:** If Tenant moves in or out of the residential unit on a date other than the first or last day of the month, the rent will be prorated.

Prorated First Month Rent: (if applicable) $_____

Prorated Last Month Rent: (if applicable) $_____

| RECEIPT - RECEIVED FROM TENANT BY LANDLORD AT THE SIGNING OF THIS LEASE: | AMOUNT |
|---|---|
| FIRST MONTH'S RENT PAID IN ADVANCE | $ |
| FIRST MONTH'S UTILITIES PAID IN ADVANCE | $ |
| LAST MONTH'S RENT PAID IN ADVANCE | $ |
| SECURITY DEPOSIT PAID IN ADVANCE | $ |
| NON-REFUNDABLE PET DAMAGE DEPOSIT PAID IN ADVANCE | $ |
| OTHER (Specify) _____, PAID IN ADVANCE | $ |
| TOTAL RECEIVED FROM TENANT: | $ |

**Utilities Not Included in Rent**
- Propane
- Electricity
- Telephone
- Cable
- Garbage
- Recycling

**Utilities Included in Rent**
- Sewer
- Water
- Internet

The person authorized to manage the Premises is:
Dennis Thompson, Aitkin County Land Department
502 Minnesota Avenue N.
Aitkin, MN. 56431
(218) 927-7364

The Landlord or agent authorized to accept service of process and receive and give receipts for notices is:
Kirk Peysar, Aitkin County Auditor
307 2nd Street NW, Room 121
Aitkin, MN. 56431
(218) 927-7354

## TERMS OF THIS LEASE

1. **OCCUPANCY AND USE:** Only the Tenants and Occupants listed above may live in the Premises, except as allowed by law. The Premises, Utilities and Services shall be used only for common residential uses. Tenant shall use these Premises only as a private residence. Tenant shall not use the Premises in any way that is unlawful, illegal, or dangerous. Tenant shall not use the Premises in any way that would cause a cancellation, restriction or increase in premium of Owner's insurance.

2. **RENT:** Tenant shall pay rent of $600 in advance on or before the first day of every month. Tenant shall pay the Rent at: Aitkin County Auditor's Office, 307 2nd Street NW, Room 121, Aitkin, MN 56431 or other reasonable place requested by Landlord. A $600/month housing allowance will be processed through the Tenant's payroll.

3. **LATE FEE AND RETURNED CHECK FEE:** If Landlord does not receive the rent by the fifth day of the month, Tenant must pay any late fee listed above as additional rent if requested in writing by Landlord. Tenant shall also pay $30.00 for each unpaid check returned by Tenant's bank. Rent is "paid" when Landlord receives it, not when mailed or sent by Tenant.

4. **SECURITY DEPOSIT:** Landlord may use the security deposit to:
   **A.** cover Tenant's failure to pay rent or other money due to Landlord.
   **B.** return the Premises to its condition at the start of the tenancy except for ordinary wear and tear.

   If Landlord needs to use all or part of the security deposit for an obligation of Tenant's, Tenant shall have ten (10) days to reimburse Landlord. The ten-day period shall begin when Landlord has given written notice to Tenant. If not timely reimbursed, Landlord may add it to the next month's Rent.

   Within 21 days after the tenancy ends and Tenant gives Landlord a forwarding address, Landlord shall return the full security deposit with interest or send a letter explaining what as withheld and why.

5. **EACH TENANT RESPONSIBLE:** Each Tenant is responsible for all money due to Landlord under this Lease, not just a proportionate share.

6. **TENANT PAYS FOR DAMAGE:** Tenant shall pay for all loss, cost, or damage (including plumbing trouble) caused by the willful or irresponsible conduct of Tenant or by a person under Tenant's direction or control.

7. **LANDLORD'S NON-WAIVER:** Payments other than rent are due when Landlord demands them from Tenant. Landlord's failure or delay in demanding payments is not a waiver. Landlord may demand payments before or after Tenant vacates the Premises.

8. **ATTORNEY'S FEES.** The court may award reasonable attorney's fees and costs to the party who prevails in a lawsuit about the tenancy.

9. **PREMISES INSPECTION**. Landlord and Tenant inspected the Premises together and signed an inspection sheet before signing this Lease. A copy is attached. When the Lease ends, Landlord and Tenant shall inspect again and complete a second inspection sheet.

10. **LANDLORD'S PROMISES:**
    - **A.** The Premises and all common areas are fit for the use intended by Landlord and Tenant.
    - **B.** Landlord shall make necessary repairs. Landlord need not repair damage caused by the willful or irresponsible conduct of Tenant, Tenant's guests, or a person under Tenant's direction or control.
    - **C.** Landlord shall keep the Premises up to code unless a violation of the codes has been caused by the willful or irresponsible conduct of Tenant, Tenant's guests, or a person under Tenant's direction or control.

11. **TENANT'S PROMISES:**
    - **A.** Tenant shall not allow damage to the Premises.
    - **B.** Tenant shall not allow waste of the Utilities or Services provided by Landlord.
    - **C.** Tenant shall make no alterations or additions.
    - **D.** Tenant shall remove no fixtures.
    - **E.** Tenant shall not paint the Premises without Landlord's written consent.
    - **F.** Tenant shall keep the Premises clean and tidy.
    - **G.** Tenant shall not unreasonably disturb the peace and quiet of others.
    - **H.** Tenant shall not interfere with the management of the property and shall not allow Tenant's guests to do so.
    - **I.** Tenant shall use the Premises only as a private residence and shall not operate a business on the Premises.
    - **J.** Tenant shall not use the Premises in any way that is unlawful, illegal, or dangerous.
    - **K.** Tenant shall not use the Premises in any way that would cause a cancellation, restriction or increase in premium in Landlord's insurance.
    - **L.** Tenant shall not use or store in or near the Premises any inflammable or explosive substances in an unsafe manner.
    - **M.** Tenant shall notify Landlord in writing of any repairs to be made.
    - **N.** Tenant shall recycle or dispose of trash in the outside containers provided for those purposes.

12. **RESTRICTIONS:**
    - **A. WATERBEDS:** Tenant shall not have water beds or other water-filled furniture on the Premises.
    - **B. PETS:** Tenant shall not have animals or pets on the Premises without Landlord's prior written approval. A $500 non-refundable pet damage deposit is required should the Tenant get approval to have animals or pets on the Premises.
    - **C. LOCKS:** Tenant shall not add or change locks. At Tenant's request, Landlord will change the locks or have the lock cylinders re-keyed at Tenant's expense. If the locks do not meet current municipal codes or regulations, Landlord shall change the locks at Landlord's expense.

13. **LANDLORD'S RIGHT TO ENTER:** Landlord may enter the Premises for a reasonable business purpose. Landlord must first make a good faith effort to give Tenant reasonable notice of the intent to enter. Landlord may enter the Premises in an emergency. Landlord must disclose the date, time and purpose of the emergency entry in writing. The writing must be left in a conspicuous place in the Premises.

14. **DAMAGE OR INJURY TO TENANT OR TENANT'S PROPERTY:** Landlord is not responsible for any injury or damage that was not caused by a willful or negligent act or failure to act of Landlord. Tenant may obtain Renter's Insurance.

15. **NOTICE OF DANGEROUS CONDITIONS:** Tenant shall promptly notify Landlord of any conditions that might cause damage to the Premises or waste Utilities or Services provided by Landlord. The notice may be oral or in writing.

16. **SUBLETTING:** Tenant shall not sublet part or all of the Premises without Landlord's written consent. Tenant shall not assign this Lease without Landlord's written consent. The consent shall not be unreasonably withheld or delayed.

17. **MOVING OUT OR HOLDING OVER:** Tenant must move out not later than 11:59 p.m. on the Ending Date. If Tenant occupies the Premises after the Ending Date with Landlord's permission and this Lease has not been renewed nor a new Lease made, this Lease becomes a month-to-month lease under its original terms.

18. **NOTICE IF LEASE BECOMES MONTH-TO-MONTH:** If this Lease is or becomes month-to-month, written notice is required by Landlord or Tenant to end the Lease. The notice must end the lease on the last day of a month and must be received before the first day of that month. For example, to end a month-to-month lease on April 30, the notice must be received on March 31 or earlier.

19. **VACATING:** When moving out, Tenant must:
    - **A.** Leave the Premises in the same condition as at the start of the Lease, except for ordinary wear and tear and fire or casualty loss. The interior of the house and other buildings shall be "broom clean". All rubbish, garbage, and debris shall be removed from the Premises.
    - **B.** Completely vacate the Premises, including storage units, garage and parking stalls.
    - **C.** Give Landlord a forwarding address.
    - **D.** Give Landlord all keys and personal property issued to Tenant for Tenant's use such as garage door openers, and tools. If Tenant does not return all keys within 24 hours of vacating, Landlord may change the locks and charge reasonable costs to Tenant.

20. **PREMISES DESTROYED, UNINHABITABLE OR UNFIT FOR OCCUPANCY:**
    - **A.** If the Premises is destroyed or becomes totally uninhabitable or completely unfit for occupancy through no fault or neglect of Tenant or a person under Tenant's direction or control, either Landlord or Tenant may end this Lease. To end the lease, Tenant or Landlord shall give prompt written notice to the other. Rent shall be prorated as of the date the Premises became unfit for occupancy.
    - **B.** If the Premises is destroyed or becomes totally uninhabitable or completely unfit for occupancy through the fault or neglect of Tenant or a person under Tenant's direction or control, Landlord may end this Lease. Landlord shall give prompt written notice to Tenant.

21. **BREACH OF LEASE; LANDLORD'S RIGHT OF REENTRY:** Landlord shall have a right of reentry for Tenant's breach of this Lease. If Tenant materially breaches this Lease, Landlord may do these things.
    - **A.** Demand in writing that Tenant immediately give up possession of the Premises. If Tenant does not give up possession, Landlord may bring an eviction action.
    - **B.** Demand in writing that Tenant give up possession of the Premises to Landlord at a certain date in the future. If Tenant does not give up possession on that date, Landlord may bring an eviction action. Landlord may accept rent for the period up to the date possession is to be transferred without giving up Landlord's right to evict.
    - **C.** Bring an eviction action immediately.

22. **DUTY TO PAY RENT AFTER EVICTION OR SURRENDER:** Rent is due under this Lease even if Tenant surrenders the Premises or is evicted by Landlord. Landlord shall make good faith efforts to mitigate damages.

23. **SUBORDINATION:** This lease is subordinate to any mortgage against the Premises. No new owner or lender shall disturb Tenant's occupancy but shall have Landlord's remedies if Tenant defaults. Tenant shall sign documents reasonably requested by Landlord. Tenant appoints Landlord as attorney-in-fact to sign such documents for any mortgagee.

24. **EXERCISE OF RIGHTS AND REMEDIES:** Either party may use any or all of its legal rights and remedies. The use of one or more rights or remedies is not an election of remedies.

25. **SUBROGATION:** Tenant and Landlord give up all rights of subrogation against the other for loss or damage covered by insurance.

26. **TERMS:** Where appropriate, singular terms include the plural and plural terms include the singular.

27. **MISREPRESENTATIONS:** Any materially false statement made by either Landlord or Tenant to the other that induces the signing of this Lease is a breach of this Lease.

28. **ATTACHMENTS ARE PART OF LEASE - NO ORAL AGREEMENTS:** Attachments to this Lease, such as Landlord's building rules, if any, are a part of this Lease. No oral agreements have been made. This Lease with its attachments is the entire agreement between Landlord and Tenant.

**29. NOTICES:** A notice or demand mailed to or handed to any one of the Tenants named above is notice to all Tenants.

**30. NOTICE OF PROHIBITION AGAINST UNLAWFUL ACTIVITIES:**

**A.** Landlord and Tenant shall not unlawfully allow controlled substances in the Premises or in the common area or curtilage of the Premises. The Premises will not be used by Tenant or persons under Tenant's control to manufacture, sell, give away, barter, deliver, exchange, distribute or possess with the intent to sell, give away, barter, deliver, exchange, or distribute a controlled substance in violation of any local, state or federal law.

**B.** Landlord and Tenant shall not allow prostitution or prostitution-related activity as defined in MINN. STAT. §617.80, Subdivision 4, to occur on the Premises or in the common area and curtilage of the Premises.

**C.** Landlord and Tenant shall not allow the unlawful use or possession of a firearm in violation of MINN. STAT. §609.66, Subdivision 1a, §609.67, or §624.713 on the property, its lands, or common area.

The following notice is required by MINN. STAT. §504B.305. A seizure under §609.5317, Subd. 1, for which there is not a defense under §609.5317, Subd. 3, constitutes unlawful detention by Tenant.

**31. LEAD PAINT WARNING AND DISCLOSURE. HOUSING BUILT PRIOR TO 1978:** Housing built before 1978 may contain lead-based paint. Lead from paint, paint chips and dust can pose health hazards if not managed properly. Lead exposure is especially harmful to young children and pregnant women. Before renting pre-1978 housing, lessors must disclose the presence of known lead-based paint and/or lead-based paint hazards in the dwelling. Lessees must also receive a federally-approved pamphlet on lead poisoning prevention.

**A. Hazards Disclosed:** Landlord knows of the following lead-based paint or lead-based paint hazards on the Premises (If none, state "none").

**B. Reports Disclosed:** Landlord has provided Tenant with the following, which are all records and reports available to Landlord pertaining to lead-based paint or lead-based paint hazards on the Premises. (If no such records or reports are available to Landlord, state "none").

**Tenant's Acknowledgment:** Tenant has received the records or reports noted in paragraph B., above and a copy of the pamphlet, *Protect Your Family from Lead in Your Home,* EPA publication EPA747-K-94-001.

Tenants' initials _____ _____ _____

**C. Agent's Acknowledgment:** Agent has informed Landlord of Landlord's obligations under 42 U.S.C. 4852(d) and is aware of agent's responsibility to ensure compliance.

Agent's initials _____ _____ _____

By signing below, Landlord, Tenant and Agent certify the accuracy of the statements in the above paragraph.

Landlord: _____ Date: _____

Tenant: _____ Date: _____

**32. CHANGES TO LEASE:** Landlord and Tenant may change the terms of this Lease in writing.

**33. SMOKING:** Tenant shall not allow smoking on the Premises.

"Smoking" means inhaling, exhaling, burning, or carrying any lighted or heated cigar, cigarette, pipe, or similar object, containing, made, or derived from, nicotine, tobacco, marijuana, or other plant, whether natural or synthetic, that is intended for inhalation. "Smoking" also includes the action or practice of inhaling and exhaling the vapor produced by an electronic cigarette or similar device. (commonly known as "vaping").

**34. MAINTENANCE:** This lease is for the entire house and lot including the entire yard area.

**A. STRUCTURE:** All exterior maintenance and repairs to the structures on the Premises shall be the responsibility of Landlord.

**B. MECHANICAL SYSTEMS, ELECTRIC SYSTEMS, AND APPLIANCES:** All repairs to Landlord's appliances or to built-in appliances or to the mechanical or electrical systems serving the Premises shall be the responsibility of the Landlord. Tenant shall provide prompt notice to Landlord of any maintenance or repair issues. Landlord shall provide a list of approved maintenance and repair contractors to Tenant, and, in the absence of such list and in the absence of a prompt response from Landlord, Tenant may hire a contractor to make repairs and deduct the costs from rents due.

**C. LANDSCAPE MAINTENANCE:**

(1) Removal of snow and ice from the driveway and sidewalks shall be the responsibility of the Tenant.
(2) Lawn mowing shall be the responsibility of the Landlord.
(3) Fall clean-up of leaves and yard debris shall be the responsibility of the Tenant.
(4) Regular watering of the lawn, shrubs and trees shall be the responsibility of the Tenant.

**D. INTERIOR MAINTENANCE AND CLEANING:** Tenant shall keep the house clean and tidy through regular and reasonable housekeeping and through regular maintenance of the walls, woodwork, floors, furnishings, fixtures, appliances, and interior surfaces of windows. Tenant shall not make any alternations or additions or remove any fixtures or paint the premises without the written consent of Landlord.

**35. ADDITIONAL TERMS:**

**A.** Tenant is required to be an employee of Aitkin County while the lease is in effect. If Tenant is not a county employee, this lease will terminate immediately.

**B.** Tenant and Landlord will sign off on attached Residential House Lease Move In-Out Checklist.

**Landlord and Tenant agree to the terms of this Lease.**

| Landlord | | Tenants | |
|---|---|---|---|
| _____ | Date _____ | _____ | Date _____ |
| _____ | Date _____ | _____ | Date _____ |
| _____ | Date _____ | _____ | Date _____ |
| _____ | Date _____ | _____ | Date _____ |

# Board of County Commissioners Agenda Request

**6A**
Agenda Item #

**Requested Meeting Date:** February 13, 2024

**Title of Item:** Long Lake Conservation Center 2023 Budget Review

| | |
|---|---|
| ☑ REGULAR AGENDA<br>☐ CONSENT AGENDA<br>☐ INFORMATION ONLY | **Action Requested:**<br>☐ Approve/Deny Motion<br>☐ Adopt Resolution (attach draft)<br>☐ Direction Requested<br>☑ Discussion Item<br>☐ Hold Public Hearing*<br>**provide copy of hearing notice that was published* |
| **Submitted by:**<br>Dennis (DJ) Thompson | **Department:**<br>Land |
| **Presenter (Name and Title):**<br>Dave McMillan, LLCC Manager | **Estimated Time Needed:**<br>10 Minutes |

**Summary of Issue:**

Dave would like to present to the Board a review of Long Lake Conservation Center's 2023 budget.

**Alternatives, Options, Effects on Others/Comments:**

**Recommended Action/Motion:**

**Financial Impact:**

*Is there a cost associated with this request?* ☐ *Yes* ☑ *No*

*What is the total cost, with tax and shipping? $*

*Is this budgeted?* ☐ *Yes* ☐ *No* *Please Explain:*

Legally binding agreements must have County Attorney approval prior to submission.

# 2023 Budget Review

## February 13, 2024

What you need to know so your child can have a trip of a lifetime.

LONG LAKE
CONSERVATION CENTER

# ACCOUNTS

- Administration
- Education
- Food Services
- Maintenance

# ADMINISTRATION

| | 2023 Budgeted | 2023 Actual | Difference |
|---|---|---|---|
| Revenue | $ 104,576 | $ 106,606 | + $2,030 |
| Expenses | $ 231,786 | $ 220,831 | - $10,955 |

- Revenue was slightly higher than budgeted
- Expenses were less than budgeted
- $47,874 in sales from the Canteen

# EDUCATION

| | 2023 Budgeted | 2023 Actual | Difference |
|---|---|---|---|
| Revenue | $ 715,632 | $ 430,811 | - $284,821 |
| Expenses | $ 363,901 | $ 359,391 | - $4,510 |

- Revenue was significantly below what was budgeted
- Expenses were slightly less than budgeted
- Lost revenue was from lost school groups and fewer students per school
- LCCMR reimbursement not accounted for
- Summer and non-school group revenue combined was higher than budgeted

# FOOD SERVICE

| | 2023 Budgeted | 2023 Actual | Difference |
|---|---|---|---|
| Revenue | $ 5,000 | $ 3,261 | - $1,739 |
| Expenses | $ 184,689 | $ 149,593 | - $35,096 |

- Only revenue in this account is Special Milk Refunds
- Salaries and groceries for students were expenses that came in under budget

# MAINTENANCE

| | 2023 Budgeted | 2023 Actual | Difference |
|---|---|---|---|
| Revenue | $ 75,000 | $ 75,000 | $ - |
| Expenses | $ 131,927 | $ 136,463 | + $4,536 |

- Transfer of $75,000 will be done later this month
- Exciting initiatives are coming to proactively address aging facilities

# SUMMARY

- Other than the Education account, revenues and expenses match up very close to what was budgeted.
  - Plans are being developed for an aggressive school acquisition campaign and branding that will position LLCC to take advantage of OSFA.
- Continually look for ways to cut costs. Expenses for 2023 were $48,025 less than budgeted.
- Budget shortfall once Parks transfer is made = $238,600
- Donald H. Nelson Trust balance $334,927
- Outdoor School for All legislation will be extremely important.
  - Proposed "beefier" LCCMR scholarship grant request is being developed as a backup.

# Board of County Commissioners Agenda Request

**7A**
Agenda Item #

**Requested Meeting Date:** February 13, 2024

**Title of Item:** Red Door East Fish House Park Final Board Approval

| | | |
|---|---|---|
| ☑ REGULAR AGENDA | **Action Requested:** | ☐ Direction Requested |
| ☐ CONSENT AGENDA | ☑ Approve/Deny Motion | ☐ Discussion Item |
| ☐ INFORMATION ONLY | ☐ Adopt Resolution (attach draft) | ☐ Hold Public Hearing* |
| | | **provide copy of hearing notice that was published* |

| | |
|---|---|
| **Submitted by:** Andrew Carlstrom | **Department:** Environmental Services |
| **Presenter (Name and Title):** Andrew Carlstrom, Environmental Services Director | **Estimated Time Needed:** 5 Minutes |

**Summary of Issue:**

On October 16, 2023 the Aitkin County Planning Commission approved the conditional use permit for the Red Door East Fish House Park proposed by Widseth and RD Holdings. The campground is a commercial planned unit development on private property, and is a 77 unit recreational vehicle park. The proposed plan is making the current park more conforming by decreasing campsites from 92 to 77, reducing densities, meeting current minimum lot size requirements, upgrading utilities such as water, sewer, and electric, and increasing overall safety and efficiency of park operations.

In accordance with the Shoreland Management Ordinance Section 7.7 and the General Zoning Ordinance Section 16.0, the Planning Commission recommended approval of this CUP to the County Board with the attached 19 conditions for your review. In order to remain compliant with our ordinances I am respectfully requesting a motion to approve this conditional use permit and new campground addition to Aitkin County.

**Alternatives, Options, Effects on Others/Comments:**

Deny approval of conditional use permit.

**Recommended Action/Motion:**

Motion to approve conditional use permit of Red Door East Fish House Park in accordance with the Shoreland Management Ordinance and General Zoning Ordinance.

**Financial Impact:**

*Is there a cost associated with this request?* ☐ *Yes* ☑ *No*

*What is the total cost, with tax and shipping? $*

*Is this budgeted?* ☐ *Yes* ☐ *No* *Please Explain:*

Legally binding agreements must have County Attorney approval prior to submission.

## Conditions for Widseth #2023-001057

1. Must comply with all local, state and federal regulations that pertain to this type of proposal. Must comply with all local, state, and federal regulations that pertain to this type of operation.
2. Current septic compliance inspection on septic system (to include both septic drain fields) must be received prior Aitkin County Environmental Services/Planning & Zoning issuing permits to operate.
3. This is a conditional use permit for a commercial planned unit development in which the approved use is for a 77 lot RV Park, and must remain under the allowable impervious surface coverage.
4. Only one access from 385th Avenue and one access off of State Highway 18 is allowed to Red Door Resort's East Park.
5. Red Door Resort East Park must comply with MPCA Stormwater Pollution Prevention Plan (SWPPP)
6. Overflow parking shall be located at Red Door Resort main parking.
7. All outdoor lighting must be downward directed.
8. All pets are to be kept under control at all times and must be cleaned up after.
9. Only two motorized vehicles allowed per campsite to include but not limited to: one boat, or jet-ski, or snowmobile, or ATV, and of which one will be allowed to be stored on a leased lot while member is away.
10. Quiet hours are from 10:00 pm to 7:00 am and campers must refrain from loud party noises, music, etc.
11. One storage shed per lot is allowed not to exceed 120 square feet in size and a building greater than 25 square feet must be permitted with Aitkin County.
12. No fireworks allowed unless permitted by the Aitkin County Sheriff.
13. No hunting or discharge of firearms is allowed.
14. Garbage service is required year around, no burning of garbage, and no refuse garbage or waste allowed outside of the dumpsters.
15. Must comply with all state Wetland Conservation Act requirements and work with Aitkin County Environmental (Wetland) Specialist addressing future wetland concerns.
16. A storm shelter and evacuation plan meeting state regulations shall be completed prior to issuing final permits.
17. Applicant shall provide to Aitkin County Environmental Services/Planning & Zoning a RV Park contact person and phone number, and update if there is any change in management.
18. Any decks higher than 6 inches off of ground or larger than 32 square feet shall be permitted by Aitkin County Environmental Services/Planning & Zoning, and must not be larger than 300 square feet total.
19. On eastern boundary of property, maintain a 30 foot setback of a natural vegetative buffer.

**Aitkin County Environmental Services Planning and Zoning**
**307 Second Street NW**
**Room 219**
**Aitkin, MN 56431**
Phone: 218-927-7342
Fax: 218-927-4372

## MEMORANDUM TO AITKIN COUNTY PLANNING COMMISSION

DATE: October 16, 2023

FROM: Andrew Carlstrom, Environmental Services Director – Planning & Zoning Administrator

RE: Red Door Resort East Conditional Use Permit Application

Red Door Resort (East Fish House Park) initially began in 1990 and has grown into 92 individual, electric only fish house lots. Since 1990 and during the course of several owners, the resort has been operating without a conditional use permit. The proposer has been forth-coming and has had several pre-meetings over the past two years with Aitkin County Planning and Zoning, desiring to bring Red Door Resort East into conformity. The proposed plan includes no "change of use" for the property, and includes reducing campsites from 92 to 77, reducing densities, meeting current minimum lot size requirements, upgrading utilities such as water, sewer, and electric, and increasing the overall safety and efficiency of park operations. The proposal is consistent with the Aitkin County Comprehensive Land Use Management Plan of promoting tourism and recreation goals.

The Planning & Zoning staff supports the above proposal on property that has been used as a campground for over 30 years, and which decreases the current Red Door East usage by 15 campsites to a new total of 77 campsites. The staff concludes that no significant environmental effects would or could be caused by bringing Red Door Resort East into conformity with current Aitkin County ordinances. If approved, the anticipated benefits to general Aitkin County zoning, as well as benefits to the environment include: an updated septic for the entire campground, updated water and electrical, an updated solid waste plan for the resort, increased open space for the campground, and an updated MPCA-approved Stormwater Pollution Prevention Plan (SWPPP).

If you have any questions, please feel free to contact me at 218-927-7342 or by email at andrew.carlstrom@co.aitkin.mn.us.

# AGENDA

**THE AITKIN COUNTY PLANNING COMMISSION WILL ASSEMBLE FOR A HEARING ON OCTOBER 16, 2023 AT 4:00 P.M.**
**IN THE BOARD ROOM OF THE AITKIN COUNTY GOVERNMENT CENTER (THIRD FLOOR)**
**307 SECOND STREET NW, AITKIN, MINNESOTA 56431**
THE FOLLOWING ITEMS WILL BE REVIEWED:

1. **Call the meeting to order.**

2. **Roll call.**

3. **Approve the agenda** for the OCTOBER 16, 2023 Planning Commission meeting.

**OLD BUSINESS:** (None)

**NEW BUSINESS:**

4. **Doug & Karen McCormick, 22209 450th Ave, Aitkin, MN 56431** Requesting renewal of Interim Use Permit #44135I to operate a vacation home rental, up to 6 overnight occupants, in an area zoned Shoreland (Round Lake). .75 AC OF LOT 1 IN DOC 398376, SECTION THIRTY-TWO (32), TOWNSHIP FORTY-FIVE (45), RANGE TWENTY-SEVEN (27), Aitkin County, Minnesota.
**APPLICATION# 2023-000954**

5. **Steven H Olson, PO BOX 156, Buffalo, MN 55313,** Requesting an Interim Use Permit to operate a vacation home rental up to 4 overnight occupants, in an area zoned Shoreland (Minnewawa Lake). LOT 151, SHESHEBE POINT, SECTION TWENTY-ONE (21), TOWNSHIP FORTY-NINE (49), RANGE TWENTY-THREE (23), Aitkin County, Minnesota.
**APPLICATION# 2023-001048**

6. **Craig Anderson, 50013 State Hwy 65, McGregor, MN 55760,** Requesting a Conditional Use Permit for floodproofing an accessory structure (garage) located in the 1% annual chance floodplain, an area zoned Shoreland (Big Sandy Lake). .28 AC LOT 6 IN DOC 444272, SECTION SEVEN (7), TOWNSHIP FORTY-NINE (49), RANGE TWENTY-THREE (23), Aitkin County, Minnesota.
**APPLICATION# 2023-001040**

7. **Widseth, 7804 Industrial Park Rd S, Baxter, MN 56425,** Requesting a Conditional Use Permit for a commercial planned unit development for a 77 unit recreational vehicle park (redesign of an existing park), in an area zoned Farm Residential and Shoreland (Mille Lacs).
NW OF SE IN DOC 318074 LESS N 430 FT, 2 AC IN NW OF SE IN DOC 367019, W 100 FT OF E 300 FT OF NW SE AND W 100 FT OF E 200 FT OF NW SE, SECTION TWENTY (20), TOWNSHIP FORTY-FIVE (45), RANGE TWENTY-SIX (26), AITKIN COUNTY, MINNESOTA.
**APPLICATION# 2023-001057**

8. **Proposed amendment to the Aitkin County Zoning Ordinance (Section 17 Vacation/Short-Term Rental)**

# EXISTING /PROPOSED CONDITIONS OVERLAY

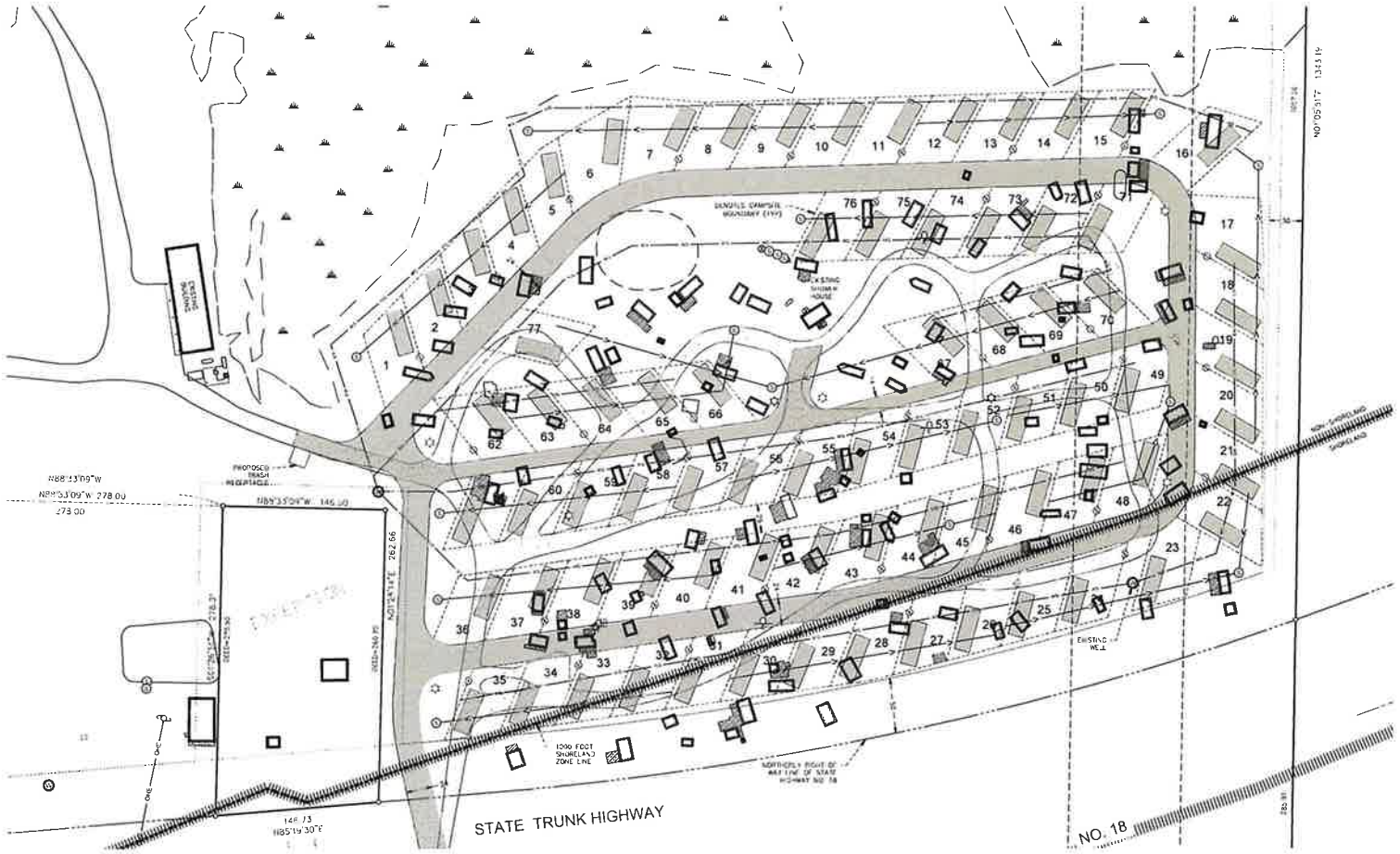


| | | | | | |
|---|---|---|---|---|---|
| DATE | OCTOBER 12 2023 | DATE | AMENDMENTS | BY | PREPARED FOR: RD HOLDINGS |
| SCALE | AS SHOWN | | | | I HEREBY CERTIFY THAT THIS SURVEY, PLAN, OR REPORT WAS PREPARED BY ME OR UNDER MY DIRECT SUPERVISION AND THAT I AM A DULY LICENSED LAND SURVEYOR UNDER THE LAWS OF THE STATE OF MINNESOTA |
| DRAWN BY | CPS | | | | |
| CHECKED BY | CJC | | | | |
| FILE NUMBER | 2022-10540 | | | | CHRISTOPHER J. CONNER DATE LIC. NO. 47643 |

© 2023 WIDSETH

WIDSETH
ARCHITECTS • ENGINEERS • SCIENTISTS • SURVEYORS

# Board of County Commissioners Agenda Request

**7B**
Agenda Item #

**Requested Meeting Date:** February 13, 2024

**Title of Item:** Residential Waste Electronics Collection

| | | |
|---|---|---|
| ☑ REGULAR AGENDA | **Action Requested:** | ☐ Direction Requested |
| ☐ CONSENT AGENDA | ☑ Approve/Deny Motion | ☐ Discussion Item |
| ☐ INFORMATION ONLY | ☐ Adopt Resolution (attach draft) | ☐ Hold Public Hearing* |
| | *provide copy of hearing notice that was published* | |

**Submitted by:**
Andrew Carlstrom

**Department:**
Environmental Services

**Presenter (Name and Title):**
Andrew Carlstrom, Environmental Services Director

**Estimated Time Needed:**
5 Minutes

**Summary of Issue:**

In an effort to encourage and offer more opportunities for Aitkin County residents to recycle used electronics and divert these items from the waste stream, I am respectfully requesting to schedule a residential electronics waste collection event on June 1, 2024 from 10AM to 1PM. I have confirmed this date with Retrofit Companies who has served as our contractor for the past 7 years. We will continue to receive screened items for $15.00/each as recommended by Retrofit, and which is in comparable with neighboring counties.

In 2023 we charged $15.00 per screen item and recovered 60% of the total cost of the collection event. The total collection cost was $3648.00 ($1000.00 is the event fee which supplies two staff, gaylord boxes, pallets, plastic wrapping, and semi/trailer for transportation) and we took in $2745.00 for revenue. All non-screened items will be free-of-charge. Last year totals from June 3, 2023: 150 households participated, 183 screened items collected

**Alternatives, Options, Effects on Others/Comments:**

Deny approval of the Electronics Waste Collection Event.

**Recommended Action/Motion:**

Motion to approve Electronics Waste Collection Event on June 1, 2024. If approved, an additional motion to approve $400.00 cash in start-up funds fro the Auditor's Office is required.

**Financial Impact:**

*Is there a cost associated with this request?* ☑ *Yes* ☑ *No*

*What is the total cost, with tax and shipping?* $ Estimated at $3500.00 to $4200.00

*Is this budgeted?* ☑ *Yes* ☐ *No* *Please Explain:*

Legally binding agreements must have County Attorney approval prior to submission.

# Board of County Commissioners Agenda Request

**8A**
Agenda Item #

**Requested Meeting Date:** February 13, 2024

**Title of Item:** ICAC JPA

| | |
|---|---|
| ☑ REGULAR AGENDA<br>☐ CONSENT AGENDA<br>☐ INFORMATION ONLY | **Action Requested:**<br>☐ Approve/Deny Motion<br>☑ Adopt Resolution (attach draft)<br>☐ Direction Requested<br>☐ Discussion Item<br>☐ Hold Public Hearing*<br>**provide copy of hearing notice that was published* |
| **Submitted by:**<br>Sheriff Dan Guida | **Department:**<br>Aitkin County Sheriff's office |
| **Presenter (Name and Title):**<br>Sheriff Dan Guida | **Estimated Time Needed:**<br>10 minutes |

**Summary of Issue:**

Approve Joint Powers Agreement - Internet Crimes Against Children

**Alternatives, Options, Effects on Others/Comments:**

**Recommended Action/Motion:**

Adopt attached resolution and authorize Board Chair and Administrator to sign agreement.

**Financial Impact:**

*Is there a cost associated with this request?* ☐ *Yes* ☑ *No*

*What is the total cost, with tax and shipping? $*

*Is this budgeted?* ☐ *Yes* ☐ *No* *Please Explain:*

Legally binding agreements must have County Attorney approval prior to submission.

SWIFT Contract Number: 242973
ORI: MN0010000

# STATE OF MINNESOTA

## JOINT POWERS AGREEMENT
## MINNESOTA INTERNET CRIMES AGAINST CHILDREN TASK FORCE

This Joint Powers Agreement ("Agreement") is between the State of Minnesota, acting through its Commissioner of Public Safety on behalf of the Bureau of Criminal Apprehension ("BCA"), and the "County of Aitkin on behalf of its County Sheriff's Office at 217 2nd St NW Room 185 Aitkin, MN 56431" ("Governmental Unit").

### Recitals

Under Minnesota Statutes, § 471.59, the BCA and the Governmental Unit are empowered to engage in agreements that are necessary to exercise their powers. The parties wish to work together to investigate and prosecute crimes committed against children and the criminal exploitation of children that is committed and/or facilitated by or through the use of computers, and to disrupt and dismantle organizations engaging in these activities. The Governmental Unit wants to participate in the Minnesota Internet Crimes Against Children (ICAC) Task Force and be provided reimbursement of the following: equipment, training, and expenses (including travel and overtime) as are incurred by law enforcement as a result of ongoing investigations.

### Agreement

1. **Term of Agreement**
   - **1.1 Effective Date.** This Agreement is effective on the date BCA obtains all required signatures pursuant to Minnesota Statutes, § 16C.05, subdivision 2.
   - **1.2 Expiration Date.** This Agreement expires five years from the date it is effective unless terminated earlier pursuant to clause 12.

2. **Purpose**
   The Governmental Unit and BCA enter into this Agreement to implement a three-pronged approach of prevention, education and enforcement to combat internet crimes against children. This Agreement provides the mechanism to reimburse the Governmental Unit for equipment, training and expenses (including travel and overtime), which are incurred by law enforcement as a result of these investigations.

3. **Standards**
   The Governmental Unit will adhere to the ICAC Program standards identified below.

   - **3.1** Investigate activities related to internet crimes and the exploitation of children through the use of computers.
   - **3.2** Investigate organizations to disrupt and dismantle crimes committed against children.
   - **3.3** Investigators will follow appropriate state and/or federal laws in obtaining arrest warrants, search warrants and civil and criminal forfeitures. Investigators will follow proper legal procedures in securing evidence, including electronic devices.
   - **3.4** Investigators will understand and use appropriate legal procedures in the use of informants including documentation of identity, monitoring of activities, and use and recordation of payments.
   - **3.5** Investigators will use, as appropriate, the most current investigative technologies and techniques.

**3.6** Investigators must be licensed Minnesota peace officers.
**3.7** Investigators will comply with the guidelines of the Department of Justice Internet Crimes Against Children Program Operational and Investigative Standards.

**4. Responsibilities of the Governmental Unit and the BCA**

**4.1 The Governmental Unit will:**

**4.1.1** Assign a Governmental Unit point of contact to act as the liaison between it and the BCA ICAC Project Commander to assist in reimbursement deadlines.

**4.1.2** Submit an ICAC reimbursement request for pre-approval of funds. This request shall include a description of the item requested for reimbursement and an explanation of how it qualifies under the required criteria in Clauses **3.1** and **3.2** and an operational plan.

**4.1.3** Conduct investigations in accordance with provisions of the ICAC Operational and Investigative Standards, identified in Clause 3.7 above, and conclude the investigations in a timely manner.

**4.1.4** Allow BCA to inform participating agencies of potential case connections based on data submitted to BCA through the ICAC Program.

**4.1.5** Not comingle ICAC funds with any other existing federal or state grant funded overtime or additional local Governmental Unit funding.

**4.2 The BCA will:**

**4.2.1** Provide a Senior Special Agent who will serve as the Commander of the Task Force.

**4.2.2** Review and approve or decline reimbursement requests under clause 4.1.2 within seven (7) business days of the reimbursement request.

**4.3** Nothing in this Agreement shall otherwise limit the jurisdiction, powers, and responsibilities normally possessed by a Governmental Unit acting through its employees.

**5. Payment**

**5.1** To receive reimbursement for an expense, Governmental Unit must make a request for reimbursement to the BCA Authorized Representative under the required criteria for operational and investigative standards.

**5.2** To receive approved reimbursement, Governmental Unit must submit an expense form no later than 15 business days after the end of the month during which the expense is incurred.

**5.3** The BCA will pay the Governmental Unit within thirty (30) calendar days of the submission of the expense form.

**5.4** In the event Governmental Unit breaches this Agreement, it will not be eligible to receive reimbursement for any expenses.

**6. Authorized Representatives**

The BCA's Authorized Representative is the following person or his successor:

| | |
|---|---|
| Name: | Bobbi Jo Pazdernik, Commander of MN ICAC |
| Address: | Department of Public Safety; Bureau of Criminal Apprehension<br>1430 Maryland Street East Saint Paul, MN 55106 |
| Telephone: | 651-793-7000 |
| E-mail Address: | bobbijo.pazdernik@state.mn.us |

The Governmental Unit's Authorized Representative is the following person or his/her successor:

| | |
|---|---|
| Name | Dan Guida, Sheriff |
| Address: | Aitkin County Sheriff's Office<br>218 1st St. N.W.<br>Aitkin, MN 56431 |
| Telephone: | 218-927-7435 |
| E-mail Address: | dan.guida@co.aitkin.mn.us |

If the Governmental Unit's Authorized Representative changes at any time during this Agreement, the Governmental Unit must immediately notify the BCA.

**7. Assignment, Amendments, Waiver, and Agreement Complete**

**7.1 Assignment.** The Governmental Unit may neither assign nor transfer any rights or obligations under this Agreement.

**7.2 Amendments.** Any amendment to this Agreement must be in writing and will not be effective until it has been executed and approved by the same parties who executed and approved the original Agreement, or their successors in office.

**7.3 Waiver.** If the BCA fails to enforce any provision of this Agreement, that failure does not waive the provision or its right to enforce it.

**7.4 Agreement Complete.** This Agreement contains all negotiations and agreements between the BCA and the Governmental Unit. No other understanding regarding this Agreement, whether written or oral, may be used to bind either party.

**8. Liability**

The BCA and the Governmental Unit agree each party will be responsible for its own acts and the results thereof to the extent authorized by law and shall not be responsible for the acts of any others and the results thereof. The BCA's liability shall be governed by provisions of the Minnesota Tort Claims Act, Minnesota Statutes, § 3.736, and other applicable law. The Governmental Unit's liability shall be governed by provisions of the Municipal Tort Claims Act, Minnesota Statutes, §§ 466.01-466.15, and other applicable law.

**9. Audits**

Under Minnesota Statutes, § 16C.05, subdivision 5, the Governmental Unit's books, records, documents, and accounting procedures and practices relevant to this Agreement are subject to examination by the BCA and/or the State Auditor and/or Legislative Auditor, as appropriate, for a minimum of six (6) years from the end of this Agreement.

**10. Government Data Practices**

The Governmental Unit and the BCA must comply with the Minnesota Government Data Practices Act, Minnesota Statutes Chapter 13 and other applicable law, as it applies to all data provided by the BCA under this Agreement and as it applies to all data created, collected, received, stored, used, maintained, or disseminated by the Governmental Unit under this Agreement. The civil remedies of Minnesota Statutes § 13.08 apply to the release of the data referred to in this clause by either the Governmental Unit or the BCA.

If the Governmental Unit receives a request to release the data referred to in this Clause, the Governmental Unit must immediately notify the State. The State will give the Governmental Unit instructions concerning the release of the data to the requesting party before the data is released.

**11. Venue**

The venue for all legal proceedings out of this Agreement, or its breach, must be in the appropriate state or federal court with competent jurisdiction in Ramsey County, Minnesota.

**12. Expiration and Termination**

**12.1** Either party may terminate this Agreement at any time, with or without cause, upon 30 days written notice to the other party. To the extent funds are available, the Governmental Unit shall receive reimbursement in accordance with the terms of this Agreement through the date of termination.

**12.2** In the event that federal funding is no longer available, the BCA will email the Governmental Unit's Authorized Representative and terminate the Agreement. The termination will be effective two (2) business days after email notification to the Governmental Unit; and the Governmental Unit shall receive reimbursement in accordance with the terms of this Agreement through the date of termination.

**13. Continuing Obligations**

The following clauses survive the expiration or cancellation of this Agreement: 8, Liability; 9, Audits; 10, Government Data Practices; and 11, Venue.

***The parties indicate their agreement and authority to execute this Agreement by signing below.***

**1. STATE ENCUMBRANCE VERIFICATION**
***Individual certifies that funds have been encumbered as required by Minnesota Statutes §§ 16A.15 and 16C.05.***

Signed: _____

Date: _____

SWIFT PO Number: 3000085301

**2. GOVERNMENTAL UNIT**
***Governmental Unit certifies that the appropriate person(s) has(have) executed this Agreement on behalf of the Governmental Unit and its jurisdictional government entity as required by applicable articles, laws, by-laws, resolutions or ordinances.***

By: _____

Title: Sheriff – Daniel G. Guida

Date: February 13, 2024

By: _____

Title: Board Chair – J. Mark Wedel

Date: February 13, 2024

By: _____

Title: County Administrator – Jessica Seibert

Date: February 13, 2024

**3. DEPARTMENT OF PUBLIC SAFETY; BUREAU OF CRIMINAL APPREHENSION**

By: _____
(with delegated authority)

Title: Deputy Superintendent, Investigations

Date: _____

**4. COMMISSIONER OF ADMINISTRATION**
***As delegated to the Office of State Procurement***

By: _____

Date: _____

**CERTIFIED COPY OF RESOLUTION OF COUNTY BOARD OF AITKIN COUNTY, MINNESOTA**

ADOPTED February 13, 2024

By Commissioner: xxx **20240213-xxx**

**RESOLUTION APPROVING STATE OF MINNESOTA JOINT POWERS AGREEMENTS WITH THE COUNTY OF AITKIN ON BEHALF OF ITS SHERIFF REGARDING THE MINNESOTA INTERNET CRIMES AGAINST CHILDREN TASK FORCE (ICAC)**

**WHEREAS,** the County of Aitkin on behalf of its Sheriff desires to enter into Joint Powers Agreements with the State of Minnesota, Department of Public Safety, Bureau of Criminal Apprehension to utilize applicable state and federal laws to investigate and prosecute crimes committed against children and the criminal exploitation on children that is committed and/or facilitated by or through the use of computers.

**NOW, THEREFORE, BE IT RESOLVED** by the County Board of Aitkin County, Minnesota as follows:

1. That the State of Minnesota Joint Powers Agreements by and between the State of Minnesota acting through its Department of Public Safety, Bureau of Criminal Apprehension and the County of Aitkin on behalf of its Sheriff are hereby approved. Copies of the Joint Powers Agreements are attached to this Resolution and made a part of it.

2. That the County Administrator-, Jessica Seibert, or his or her successor, is designated the Authorized Representative for the County Attorney. The Authorized Representative is also authorized to sign any subsequent amendment or agreement that may be required by the State of Minnesota to maintain the County's connection to the systems and tools offered by the State.

3. That J. Mark Wedel-, Chair of the Board of Commissioners of the County of Aitkin, and Jessica Seibert, the County Board Clerk, are authorized to sign the State of Minnesota Joint Powers Agreements.

Commissioner xxx seconded the adoption of the resolution and it was declared adopted upon the following vote

xxx MEMBERS PRESENT All Members Voting xxx

**STATE OF MINNESOTA}**
**COUNTY OF AITKIN}**

I, Jessica Seibert, County Administrator, Aitkin County, Minnesota do hereby certify that I have compared the foregoing with the original resolution filed in the Administration Office of Aitkin County in Aitkin, Minnesota as stated in the minutes of the proceedings of said Board on the 13th day of February 2024, and that the same is a true and correct copy of the whole thereof.

**Witness my hand and seal this 13th day of February 2024**

Jessica Seibert
County Administrator

J. Mark Wedel
Board Chair

# Board of County Commissioners Agenda Request

**8B**
Agenda Item #

**Requested Meeting Date:** February 13, 2024

**Title of Item:** Jail Medical

| | | |
|---|---|---|
| ☑ REGULAR AGENDA | **Action Requested:** | ☐ Direction Requested |
| ☐ CONSENT AGENDA | ☑ Approve/Deny Motion | ☐ Discussion Item |
| ☐ INFORMATION ONLY | ☐ Adopt Resolution (attach draft) | ☐ Hold Public Hearing* |
| | *provide copy of hearing notice that was published* | |

| | |
|---|---|
| **Submitted by:** Sheriff Dan Guida | **Department:** Sheriff's Office |
| **Presenter (Name and Title):** Sheriff Dan Guida and Jail Administrator Karla White | **Estimated Time Needed:** 20 Minutes |

**Summary of Issue:**

The ACH Jail Medical Contract (copy attached) will end on February 18, 2024. The following items will be discussed in more detail at the meeting.

A Jail Nurse job description is attached, Grade 10. The current jail nurse works 32 hours per week through ACH, and is available for hire by Aitkin County at end of the contract. Salaried position. HR will make a conditional job offer to J.L. (current jail nurse through ACH) following Board approval today, with a start date of February 19, 2024. This will be a temporary job offer (no benefits) that will expire June 30, 2024, or when the jail nurse position is filled permanently, whichever occurs sooner.

Riverwood Healthcare Center will be named as the temporary health care authority as it relates to Chapter 2911 requirements until a contract is authorized by the Board with a Provider (e.g. a doctor or nurse practitioner). These discussions are underway.

Items that will be worked out in-house following this Board meeting: 1) Who will serve as the jail nurse's supervisor, preferably a nurse. The Jail Administrator will authorize PTO requests, sign timesheets, and complete annual performance evaluations for the jail nurse. The jail nurse will also work closely with the Provider. 2) A contract will be finalized with a Provider and brought to the Board for approval. 3) Audit procedures will be established by the Sheriff (sharp and med counts, etc.). 4) Work with County Auditor regarding any MCIT Insurance requirements.

**Alternatives, Options, Effects on Others/Comments:**

Will discuss financial estimates at the Board meeting. No additional cost is anticipated outside of the 2024 budget. Jail policies, forms, and medical protocol are already established. Necessary supplies are on hand in the jail.

**Recommended Action/Motion:**

Motion to: 1) Approve the jail nurse job description, Grade 10, and authorize filling a temporary 32 hour per week jail nurse position as presented. 2) Motion to approve Riverwood Healthcare Center as the temporary health care authority as it relates to Chapter 2911 requirements.

**Financial Impact:**

*Is there a cost associated with this request?* ☑ *Yes* ☐ *No*

*What is the total cost, with tax and shipping?* $ Will discuss.

*Is this budgeted?* ☑ *Yes* ☐ *No* *Please Explain:*

This modification to the Jail Medical Program is anticipated to fit within the 2024 allotted budget, or to result in savings (Provider numbers are being gathered at time of agenda deadline).

Legally binding agreements must have County Attorney approval prior to submission.

# JAIL NURSE

**Department** Health and Human Services Department, Public Health Division
**Grade** Grade 10
**Reports to** To be determined / This is a temporary position
**FLSA Status** Exempt
**Union Status** Non-union

**Final Appointing Authority**
This position shall not be filled until final approval of the County Administrator. All offers of employment are made in writing by the Human Resources Department.

**Job Summary**
The Jail Nurse position plays a pivotal role in providing healthcare services within the unique and challenging environment of a correctional facility. As a Registered Nurse specializing in correctional healthcare, the incumbent will be responsible for assessing, triaging, and treating the diverse medical needs of an inmate population. This role involves close collaboration with correctional staff, effective communication with inmates, and adherence to stringent security protocols. The Jail Nurse must navigate a range of healthcare challenges, including chronic conditions, infectious diseases, and emergencies, while maintaining a balance between delivering compassionate care and upholding safety measures. The position requires adaptability, critical thinking, and the ability to work with cultural competence in a setting that demands resilience and professionalism.

**Supervision Received**
Employees working in this job class work under general supervision and usually receive some instruction with respect to details of most assignments, but are free to develop their own work sequences within established procedures, methods, and policies. They are often physically removed from their supervisor and are only subject to periodic supervisory checks.

**Supervision Exercised**
No formal supervisory authority.

**Essential Functions**
This position description is not intended to be all-inclusive. Employee may perform other essential and nonessential functions as assigned or apparent to meet the ongoing needs of the department and organization. Regular attendance is an essential requirement of this position.

1. Assesses and evaluates the health status of incarcerated individuals. Is familiar with and knows how to utilize facility policies, Minnesota Department of Corrections Chapter 2911 Rules and national correctional health care standards.
2. Performs inmate assessments and treatment at Sick Call as needed.
3. Identifies potential health issues and facilitates medical screening by performing initial and ongoing inmate assessments.

4. Reviews and assesses prescribed medications brought in by inmates.
5. Collaborates and communicates effectively with the Jail Medical Program team. This team includes medical providers, jail staff and jail administration.
6. Collaborates and communicate effectively with outside medical professionals. This includes physicians, dentists, mental health providers, pharmacy staff, Minnesota Department of Health, laboratory staff, x-ray staff and other professionals as needed.
7. Identifies staff development and training needs and ensures training is obtained to maintain RN registration with the MN Board of Nursing.
8. Trains jail staff on medication delivery and yearly required MN 2911 Rules.
9. Maintains professional and technical knowledge by attending educational workshops, reviewing professional publications, establishing personal networks and participating in professional societies.
10. Is accountable for the daily documentation, tracking, procedures, orders, medications and follow-up of the inmates' care.
11. Checks and records vital signs and obtain specimens from inmate patients for diagnostic testing.
12. Assists physicians, dentists or other medical personnel with treatment and health care plans for inmates. This includes performing medical procedures to include EKG, urinalysis, blood draws for laboratory testing and ordering medically necessary diets.
13. Coordinates and administers medication and treatment to inmates.
14. Reports treatment and medication reactions.
15. Monitors changes in inmate emotional or physical conditions.
16. Institutes communicable disease screening measures as directed.
17. Assists in the coordination of release health care plans for inmates with Jail Re-entry, Community Services and other community stakeholders.
18. Prepares medication carts for distribution to inmates. This is to include medication and sharps counts as mandated by MN Chapter 2911 Rules and preparing monthly medication administration records.
19. Educates inmates and correctional staff regarding medication side effects or symptoms.
20. Responds to inmate grievances.
21. Maintains all medical records related to health and medical screening and medical treatment administered to inmates while incarcerated.
22. Records all care information concisely, accurately and completely, in a timely manner, in the appropriate format and on the appropriate forms.
23. Conducts new hire pre-employment physicals as requested by jail administration.
24. Attends training and meetings as needed.
25. Performs other related duties as assigned or apparent.

**Minimum Qualifications**

Associate's or Bachelor's Degree in Nursing, a valid Minnesota Registered Nurse License, and a valid MN Driver's License are required. Ability to work in the secure perimeter of a correctional facility with daily inmate contact. Experience preferred.

Must satisfy continuing education requirements to maintain license and/or required certification(s).

Valid Minnesota driver's license required. Employment reference checks and a criminal background check will be performed as part of the pre-employment process.

**Knowledge, Skills, and Abilities Required**

Knowledge of:

1. Knowledge of County and departmental policies, procedures, and practices.
2. Understanding and knowledge of policies and procedures specific to healthcare in a correctional facility, including security protocols and inmate healthcare rights, including MN Chapter 2911 rules.
3. Familiarity with local, state, and federal regulations governing healthcare practices in correctional facilities, including confidentiality and privacy laws.
4. Emergency procedures.
5. Proficient clinical skills, including assessment, triage, and treatment of common medical issues and emergencies encountered in a correctional setting.
6. Knowledge of dispensing and administering medications, as well as the ability to monitor and manage medication adherence among inmates.
7. Understanding of infectious disease prevention and control measures, especially given the close quarters of a correctional environment.

Skill in:

1. Communication and interpersonal skills as applied to interaction with supervisors, coworkers, inmates, and the general public sufficient to exchange or convey information and to receive work direction.
2. Computer and typing skill sufficient to complete 35 net words per minute without errors.
3. Reading, writing, and speaking English proficiently.
4. Organizing and prioritizing work.
5. Skill in crisis intervention with the ability to handle medical emergencies and crisis situations calmly and efficiently within the constraints of a correctional facility.
6. Capability to work with other healthcare professionals, security staff, and administrative personnel to ensure comprehensive and effective healthcare delivery.
7. Sensitivity and cultural competence to provide healthcare services to a diverse inmate population.
8. Proficiency is using electronic jail and health record systems to document and manage inmate/patient information securely.

Ability to:

1. Present a positive attitude in the workplace, promote a spirit of teamwork and cooperation, and be able to treat co-workers, supervisor, and subordinates with respect, honesty, and consideration.
2. Develop and maintain effective working relationships with supervisors, co-workers, other County staff, inmates, public and private health care agencies, social workers, and the general public.
3. Maintain confidentiality.
4. Communicate effectively, both verbally and in writing with inmates, physicians and other professionals and coworkers.
5. Understand and carry out oral and written instructions.
6. Make independent decisions, and work independently and prioritize tasks.
7. Ability to adapt to the unique challenges and dynamics of a correctional environment, including dealing with potentially volatile situations.

8. Strong critical thinking skills to assess and address complex medical issues within the constraints of the correctional facility.
9. Capability to navigate and resolve conflicts and interpersonal issues that may arise among inmates or with other staff members.
10. Ability to establish and maintain professional boundaries while providing healthcare in a correctional setting.
11. Resilience to cope with the emotional demands and potential stress associated with working in a correctional environment.

**Language Skills**
Very High Skills – Ability to read, analyze, and interpret common scientific and technical journals, financial reports, and legal documents. Ability to respond to common inquiries or complaints from customers, regulatory agencies, or members of the business community. Ability to write speeches and articles for publication that conform to prescribed style and format. Ability to effectively present information to top management, public groups, and/or governing boards.

**Mathematical Skills**
Ability to add, subtract, multiply, and divide in all units of measure, using whole numbers, common fractions, and decimals. Ability to compute rate, ratio, and percent and to draw and interpret bar graphs.

**Reasoning Skills**
High Skills – Ability to solve practical problems and deal with a variety of concrete variables in situations where only limited standardization exists. Ability to interpret a variety of instructions furnished in written, oral, diagram, or schedule form.

**Computer Skills**
To perform this job successfully, an individual should be proficient at using the following software.

County Payroll Software E-time, Microsoft Word, Excel, Outlook, Publisher, PowerPoint, Public Health Activity Tracking (PHAT), SSIS, MMIS, HuBERT, MIIC, FAP, and Internet.

**Ability to Travel**
Occasional travel may be required for trainings or meetings throughout the county, region and state.

**Competencies**
To perform the job successfully, an individual should consistently demonstrate the following competencies (definitions attached or available upon request):

Ethics, attendance/punctuality, safety and security, dependability, analytical, design, problem solving, project management, technical skills, customer service, interpersonal skills, oral communication, written communication, teamwork, change management, leadership, quality management, business acumen, cost consciousness, diversity, organizational support, judgment, motivation, planning/organizing, professionalism, quality, quantity, adaptability, initiative, innovation, flexibility, and crisis management.

**Work Environment**
The noise level in the work environment is usually moderate.

A jail nurse operates in a unique and challenging work environment characterized by the convergence of healthcare and correctional demands. In this setting, nurses may encounter a diverse and dynamic inmate population with varying medical needs, often exacerbated by the prevalence of chronic conditions and infectious diseases. The close quarters and potential for volatile situations necessitate constant vigilance and adaptability, as the nurse navigates security protocols and collaborates with correctional staff. Balancing the delivery of compassionate healthcare while adhering to strict safety measures poses a continuous challenge. The nurse must be adept at crisis intervention, conflict resolution, and maintaining professional boundaries, all while demonstrating cultural competence and sensitivity. The work environment demands resilience, critical thinking, and the ability to provide comprehensive care within the confines of correctional policies and regulations.

**Equipment and Tools**
Computer, copier, fax, telephone, printer, 10-key calculator, lab and clinical equipment, county-owned vehicles, and personal vehicle (requires proof of insurance on file).

**Physical Activities/Requirements**
Climbing, balancing, stooping, kneeling, crouching, reaching, standing, walking, pushing, pulling, lifting, carrying, use of fingers, grasping, talking, hearing, seeing, and repetitive motions. Must have the ability to lift and/or carry up to 50 pounds.

While performing the duties of this job, the employee performs medium work, exerting up to 50 pounds of force occasionally, and/or up to 20 pounds of force frequently, and/or up to 10 pounds of force constantly to move objects.

Working safely is a condition of employment. Aitkin County is a drug-free and alcohol-free workplace.

**Disclaimer**
The above statements are intended to describe the general nature and level of the work being performed by employees assigned to this job classification. This is not an exhaustive list of all duties and responsibilities. Aitkin County reserves the right to amend and change responsibilities to meet organizational needs as necessary. This job description does not constitute an employment agreement between the employer and employee.

**Reasonable Accommodation Notice**
The County is an Equal Opportunity Employer. In compliance with the Americans with Disabilities Act, the County will provide reasonable accommodations to qualified individuals with disabilities and encourages both prospective and current employees to discuss potential accommodations with the employer.

2/5/2024

***Our Vision**: We strive to be a county of safe, vibrant communities that place value on good stewardship of local resources.*
***Our Mission**: Aitkin County's mission is to provide outstanding service in a fiscally responsible manner through innovation and collaboration with respect for all.*
***Our Core Values**: Collaboration, Innovation, Integrity, People-Focused, Professionalism*

Aitkin County

# Board of County Commissioners Agenda Request

Agenda Item #

**Requested Meeting Date:** 2/14/2023

**Title of Item:** ACH - Jail Medical

| | | |
|---|---|---|
| ☑ REGULAR AGENDA | **Action Requested:** | ☐ Direction Requested |
| ☐ CONSENT AGENDA | ☑ Approve/Deny Motion | ☐ Discussion Item |
| ☐ INFORMATION ONLY | ☐ Adopt Resolution (attach draft) | ☐ Hold Public Hearing* |

**provide copy of hearing notice that was published*

**Submitted by:**
Sheriff Dan Guida

**Department:**
Aitkin County Sheriff's Office

**Presenter (Name and Title):**
Sheriff Dan Guida and Jail Administrator Karla White

**Estimated Time Needed:**

**Summary of Issue:**
Approve ACH Jail Medical Contract

This contract will end 2-18-2024.

**Alternatives, Options, Effects on Others/Comments:**

**Recommended Action/Motion:**
Approve jail nursing contract with ACH

**Financial Impact:**
*Is there a cost associated with this request?* ☑ *Yes* ☐ *No*
*What is the total cost, with tax and shipping? $*
*Is this budgeted?* ☑ *Yes* ☐ *No* *Please Explain:*

Legally binding agreements must have County Attorney approval prior to submission.

# AITKIN COUNTY BOARD OF COMMISSIONERS

| February 14, 2023 | 9:00 a.m. | Government Center Board Room |
|---|---|---|

Regular Session Minutes

**1.A CALL TO ORDER**

Chair Wedel called the meeting to order at 9:00 a.m.

| Attendee Name | Title | Status |
|---|---|---|
| J. Mark Wedel | District #1 | Present |
| Laurie Westerlund | District #2 | Present |
| Travis Leiviska | District #3 | Present |
| Bret Sample | District #4 | Present |
| Michael Kearney | District #5 | Present |
| Jessica Seibert | County Administrator | Present |
| Brittany Searle | Administrative Assistant | Absent |

**1.B PLEDGE OF ALLEGIANCE**

**1.C APPROVAL OF AGENDA**

Motion to: Approve the agenda, as amended.

| | |
|---|---|
| **RESULT:** | **APPROVED (5 TO 0)** |
| **MOVER:** | **Commissioner Travis Leiviska** |
| **SECONDER:** | **Commissioner Michael Kearney** |
| | **Add 5.5 - LG220 Permit Ducks Unlimited Garrison Area Chapter** |

**1.D Citizens Public Comment by:**

William Smith - Would like an official response to a discrimination complaint he brought to the board at the last meeting.

**2 CONSENT AGENDA**

Motion to: Approve the Consent Agenda.

| | |
|---|---|
| **RESULT:** | **APPROVED (5 TO 0)** |
| **MOVER:** | **Commissioner Bret Sample** |
| **SECONDER:** | **Commissioner Laurie Westerlund** |

**A) Correspondence File-**

January 24, 2023 - February 13, 2023

**B) Approve County Board Minutes-**

January 24, 2023

**C) Approve Electronic Funds Transfers**

| | |
|---|---|
| **Total** | $2,787,097.98 |

**D) Approve Commissioner's Vouchers**

| | | | | | | | |
|---|---|---|---|---|---|---|---|
| General | $247,397.59 | Reserves | $254.00 | R&B | $107,967.96 | Unorg | $1,712.32 |
| HHS | $63,999.10 | State | $9,159.61 | Trust | $63,144.29 | Forest | $32.02 |
| Township | $3,599.53 | LLCC | $9,342.09 | Parks | $66,240.86 | **Total** | $572,849.37 |

**E) Approve Manual Warrants/Voids/Corrections-**

FSA Claims 4

| | | | | | | | |
|---|---|---|---|---|---|---|---|
| General | $53.81 | | | | | | |
| | | | | | | **Total** | $53.81 |

**F) Approve Manual Warrants/Voids/Corrections-**

State General Tax - December 2022

| | | | | | | | |
|---|---|---|---|---|---|---|---|
| State | $83,242.17 | | | | | | |

Doc ID: 605ccc2c6fb87c68bca88ae6ddb7f679bd7ad26f

HRA Committee Appointment - Susan Tange

**Y) Adopt Resolution-** *Resolution #20230214-012*
LG220 Application - Lawler Area Community Club

**Z) Adopt Resolution-** *Resolution#20230214-013*
Set Public Hearing for Land Classification 4.25.2023

**AA) Approve Manual Warrants/Voids/Corrections-**
ELAN Paid 02.02.2023

| | | | | | | | |
|---|---|---|---|---|---|---|---|
| General | ($4.82) | HHS | $4.82 | | | | |
| | | | | | | **Total** | $0.00 |

**AB) Approve-**
Out of State Travel - VCET

**AC) Adopt Resolution-** *Resolution#20230214-016*
LG220 Permit - Ducks Unlimited Aitkin

**AD) Approve Auditor Vouchers-**
Sales/Use and Diesel Tax - January 2023

| | | | | | | | |
|---|---|---|---|---|---|---|---|
| General | $191.47 | R&B | $2,238.14 | LLCC | $122.14 | Parks | $107.44 |
| | | | | | | **Total** | $2,659.19 |

**AE) Approve-**
Affidavit for Duplicate Lost Warrant - Woodland Bank

## Regular Agenda

**Informational Only**
People Centered Economic Development

**RESULT:** **INFORMATIONAL ONLY**
**MOVER:**
**SECONDER:**

**Informational Only**
Review Jail Inspection Report

**RESULT:** **INFORMATIONAL ONLY**
**MOVER:**
**SECONDER:**

**Motion to:**
Approve Medical Services Contract - ACH

**RESULT:** **APPROVED (5 TO 0)**
**MOVER:** Commissioner Laurie Westerlund
**SECONDER:** Commissioner Bret Sample

**Motion to:**
Approve FRF Request - LLCC

**RESULT:** **APPROVED (5 TO 0)**
**MOVER:** Commissioner Michael Kearney
**SECONDER:** Commissioner Laurie Westerlund

**Motion to:**
Adopt Resolution - Transfer to LLCC to Zero Out 2022 Ending Balance

**RESULT:** **APPROVED (5 TO 0)**
**MOVER:** Commissioner Travis Leiviska
**SECONDER:** Commissioner Bret Sample
**Resolution #** 20230214-014

**Motion to:**
Adopt Resolution - LG220 Permit - Ducks Unlimited Garrison Chapter

**RESULT:** **APPROVED (5 TO 0)**
**MOVER:** Commissioner Bret Sample
**SECONDER:** Commissioner Laurie Westerlund
**Resolution #** 20230214-018

**Motion to:**
Adopt Resolution - Federal Recreational Trail Grant

**RESULT:** **APPROVED (5 TO 0)**

**BUSINESS ASSOCIATE AGREEMENT**
**AITKIN COUNTY, MINNESOTA**

**Definitions**

Catch-all definition:

The following terms used in this Agreement will have the same meaning as those terms in the HIPAA Rules (https://www.federalregister.gov/articles/2013/01/25/2013-01073/modifications-to-the-hipaa-privacy-security-enforcement-and-breach-notification-rules-under-the): Breach, Data Aggregation, Designated Record Set, Disclosure, Health Care Operations, Individual, Minimum Necessary, Notice of Privacy Practices, Protected Health Information, Required By Law, Secretary, Security Incident, Subcontractor, Unsecured Protected Health Information, and Use.

Specific definitions:

(a) Business Associate. "Business Associate" will generally have the same meaning as the term "Business Associate" at 45 CFR 160.103, and in reference to the party to this agreement, will mean Advanced Correctional Healthcare, Inc.

(b) Covered Entity. "Covered Entity" will generally have the same meaning as the term "Covered Entity" at 45 CFR 160.103, and in reference to the party to this agreement, will mean Aitkin County Jail.

(c) HIPAA Rules. "HIPAA Rules" will mean the Privacy, Security, Breach Notification, and Enforcement Rules at 45 CFR Part 160 and Part 164.

**Obligations and Activities of Business Associate**

Business Associate agrees to:

(a) Not use or disclose protected health information other than as permitted or required by the Agreement or as required by law;

(b) Use appropriate safeguards, and comply with Subpart C of 45 CFR Part 164 with respect to electronic protected health information, to prevent use or disclosure of protected health information other than as provided for by the Agreement;

(c) Report to Covered Entity any use or disclosure of protected health information not provided for by the Agreement of which it becomes aware, including breaches of unsecured protected health information as required at 45 CFR 164.410, within 48 hours (except for any breaches putting patients at immediate risk of harm, which should be reported as soon as possible) and any security incident of which it becomes aware;

(d) In accordance with 45 CFR 164.502(e)(1)(ii) and 164.308(b)(2), if applicable, ensure that any subcontractors that create, receive, maintain, or transmit protected health information on behalf of the Business Associate agree to the same restrictions, conditions, and requirements that apply to the Business Associate with respect to such information;

(e) Make available protected health information in a designated record set to the Covered Entity as necessary to satisfy Covered Entity's obligations under 45 CFR 164.524;

(f) Make any amendment(s) to protected health information in a designated record set as directed or agreed to by the Covered Entity pursuant to 45 CFR 164.526, or take other measures as necessary to satisfy Covered Entity's obligations under 45 CFR 164.526;

(g) Maintain and make available the information required to provide an accounting of disclosures to the Covered Entity as necessary to satisfy Covered Entity's obligations under 45 CFR 164.528;

(h) To the extent the Business Associate is to carry out one or more of Covered Entity's obligation(s) under Subpart E of 45 CFR Part 164, comply with the requirements of Subpart E that apply to the Covered Entity in the performance of such obligation(s); and

(i) Make its internal practices, books, and records available to the Secretary for purposes of determining compliance with the HIPAA Rules.

**Permitted Uses and Disclosures by Business Associate**

(a) Business Associate may only use or disclose protected health information as necessary to perform the services set forth in the Agreement for the Provision of Health Services. The Business Associate is authorized to use protected health information to de-identify the information in accordance with 45 CFR 164.514(a)-(c).

(b) Business Associate may use or disclose protected health information as required by law.

(c) Business Associate agrees to make uses and disclosures and requests for protected health information consistent with Covered Entity's minimum necessary policies and procedures.

(d) Business Associate may not use or disclose protected health information in a manner that would violate Subpart E of 45 CFR Part 164 if done by Covered Entity, except for the specific uses and disclosures set forth below.

(e) Business Associate may use protected health information for the proper management and administration of the Business Associate or to carry out the legal responsibilities of the Business Associate.

(f) Business Associate may disclose protected health information for the proper management and administration of Business Associate or to carry out the legal responsibilities of the Business Associate, provided the disclosures are required by law, or Business Associate obtains reasonable assurances from the person to whom the information is disclosed that the information will remain confidential and used or further disclosed only as required by law or for the purposes for which it was disclosed to the person, and the person notifies Business Associate of any instances of which it is aware in which the confidentiality of the information has been breached.

(g) Business Associate may provide data aggregation services relating to the health care operations of the Covered Entity.

**Provisions for Covered Entity to Inform Business Associate of Privacy Practices and Restrictions**

(a) Covered Entity will notify Business Associate of any limitation(s) in the notice of privacy practices of Covered Entity under 45 CFR 164.520, to the extent that such limitation may affect Business Associate's use or disclosure of protected health information.

(b) Covered Entity will notify Business Associate of any changes in, or revocation of, the permission by an individual to use or disclose his or her protected health information, to the extent that such changes may affect Business Associate's use or disclosure of protected health information.

(c) Covered Entity will notify Business Associate of any restriction on the use or disclosure of protected health information that Covered Entity has agreed to or is required to abide by under 45 CFR 164.522, to the extent that such restriction may affect Business Associate's use or disclosure of protected health information.

**Permissible Requests by Covered Entity**

Covered Entity will not request Business Associate to use or disclose protected health information in any manner that would not be permissible under Subpart E of 45 CFR Part 164 if done by Covered Entity, except if the Business Associate will use or disclose protected health information for data aggregation or management and administration and legal responsibilities of the Business Associate.

**Term and Termination**

(a) Term. The Term of this Agreement will be effective as of the date of the last signature hereto, and will terminate on the termination of the Agreement for Health Services or the date Covered Entity terminates for cause as authorized in paragraph (b) of this Section, whichever is sooner.

(b) Termination for Cause. Business Associate authorizes termination of this Agreement by Covered Entity, if Covered Entity determines Business Associate has violated a material term of the Agreement and Business Associate has not cured the breach or ended the violation within the time specified by Covered Entity.

(c) Obligations of Business Associate Upon Termination.

Upon termination of this Agreement for any reason, Business Associate, with respect to protected health information received from Covered Entity, or created, maintained, or received by Business Associate on behalf of Covered Entity, will:

1. Retain only that protected health information which is necessary for Business Associate to continue its proper management and administration or to carry out its legal responsibilities;

2. Return to Covered Entity or, if agreed to by Covered Entity, destroy the remaining protected health information that the Business Associate still maintains in any form;

3. Continue to use appropriate safeguards and comply with Subpart C of 45 CFR Part 164 with respect to electronic protected health information to prevent use or disclosure of the protected health information, other than as provided for in this Section, for as long as Business Associate retains the protected health information;

4. Not use or disclose the protected health information retained by Business Associate other than for the purposes for which such protected health information was retained and subject to the same conditions set out at paragraphs (e) and (f) above under "Permitted Uses and Disclosures By Business Associate" which applied prior to termination; and

5. Return to Covered Entity [or, if agreed to by Covered Entity, destroy] the protected health information retained by Business Associate when it is no longer needed by Business Associate for its proper management and administration or to carry out its legal responsibilities.

(d) Survival. The obligations of Business Associate under this Section will survive the termination of this Agreement.

**Miscellaneous**

(a) Regulatory References. A reference in this Agreement to a section in the HIPAA Rules means the section as in effect or as amended.

(b) Amendment. The Parties agree to take such action as is necessary to amend this Agreement from time to time as is necessary for compliance with the requirements of the HIPAA Rules and any other applicable law. No amendment to this Agreement will be effective until reduced to writing and signed by the parties.

(c) Interpretation. Any ambiguity in this Agreement will be interpreted to permit compliance with the HIPAA Rules.

(d) No Third Party Beneficiaries. There are no intended third party beneficiaries to this Agreement.

(e) Without in anyway limiting the foregoing, it is the parties' specific intent that nothing contained in this Agreement give rise to any right or cause of action, contractual or otherwise, in or on behalf of any Individual whose PHI is Used or Disclosed pursuant to this Agreement.

(f) Waiver. No provision of this Agreement may be waived except by an agreement in writing signed by the waiving party. A waiver of any term or provision will not be construed as a waiver of any other term or provision.

(g) Authority. The persons signing below have the right and authority to execute this Agreement for their respective entities and no further approvals are necessary to create a binding Agreement.

(h) Conflict. In the event of any conflict between the terms and conditions stated within this Agreement and those contained within any other agreement or understanding between the parties, written, oral or implied, the terms of this Agreement will govern. Without limiting the foregoing, no provision of any other agreement or understanding between the parties limiting the liability of the Business Associate to Covered Entity will apply to the breach of any term, condition or covenant contained in this Agreement by Business Associate.

(i) Headings. The headings of each section are inserted solely for purposes of convenience and will not alter the meaning of this Agreement.

(j) Governing Law. This Agreement will be construed in accordance with and governed by the laws of the State of Minnesota.

**IN WITNESS WHEREOF,** the parties have executed this Agreement effective upon the date of the last signature hereto.

| **BUSINESS ASSOCIATE** | **COVERED ENTITY** |
|---|---|
| ADVANCED CORRECTIONAL HEALTHCARE, INC. | AITKIN COUNTY JAIL |
| Jessica K. Young, Esq., CCHP-A<br>President & Chief Executive Officer | Sheriff |
| Date | Date |

Please complete and return via email to Contracts@advancedch.com

**AGREEMENT FOR THE PROVISION OF HEALTH CARE TO INCARCERATED PATIENTS AITKIN COUNTY, MINNESOTA**

This agreement, effective as of the date of the last signature hereto, entered into by and between the County of Aitkin, located in the State of Minnesota, through the Aitkin County Sheriff in their official capacity (hereinafter referred to as "county"), and Advanced Correctional Healthcare, Inc. (hereinafter referred to as "ACH"), a Tennessee corporation.

**ARTICLE 1: ACH**

1.1 BIOMEDICAL WASTE DISPOSAL. The county will **be responsible** for biomedical waste disposal services at the facility. Typical biomedical waste expected in the medical unit would be bandages, dressings, gloves, hypodermic needles, laboratory containers, sharps, and syringes.

1.2 DENTAL CARE. ACH will provide dental triage screenings. **ACH is not responsible for any costs associated with dental care, nor is ACH responsible for performing said dental care.**

1.3 ECTOPARASITES. For patients presenting with symptoms of ectoparasitic infection (as determined by the ACH prescriber), ACH will provide medically indicated treatment. For patients without symptoms of ectoparasitic infection, ACH will provide treatment at the county's request. The county will be responsible for the cost of the treatment. ACH will not be responsible for facility cleaning for ectoparasites.

1.4 ELECTIVE CARE. Elective care is defined as care which, if not provided, would not, in the opinion of ACH's prescriber, cause the patient's health to deteriorate. ACH will not pay for elective care for patients.

1.5 LABOR. Incarcerated patients will not be employed or otherwise utilized by ACH.

1.6 MEDICAL CLAIMS RE-PRICING. Upon the county's request, ACH will re-price medical claims through our third-party vendor, JAB Management Services. Once claims are received, JAB will calculate the applicable discount (if any) and confirm the integrity of the claim prior to returning to the county for payment. The monthly amount to be paid by the county to ACH for this service is to be 30% of the savings on the medical claim(s). (For example, if JAB re-prices a $100 claim down to $20, ACH will charge the county 30% of the $80 JAB saved the county – $24.) The county agrees to pay ACH within 30 days of receipt of the bill. If the invoice is not paid within 30 days, the county agrees to pay a 1.5% per month finance charge.

1.7 MEDICAL SUPPLIES (DISPOSABLE). The county will pay for **and supply** disposable medical supplies intended for one-time use, not to include durable or reusable medical supplies. Typical disposable medical supplies expected in a medical unit would be alcohol preps, ammonia ampules, bandages, blood sugar strips, cotton-tip applicators, gauze pads, gloves, lancets, med cups, medical tape, O2 tubing, peak flow mouth pieces, PPE (personal protective equipment), pregnancy tests, saline, sterile water, syringes, tongue blades, and urine test strips. **ACH will provide a list of necessary disposable medical supplies to County.**

1.8 MENTAL HEALTH FIRST AID (MHFA) TRAINING. Mental Health First Aid is an 8-hour course that teaches you how to identify, understand and respond to signs of mental illnesses and substance use disorders. The training gives you the skills you need to reach out and provide initial

help and support to someone who may be developing a mental health or substance use problem or experiencing a crisis. ACH provides MHFA training free to your officers.

1.9 MOBILE SERVICES. Mobile services are defined as laboratory services that are drawn on-site and sent off-site for testing, and any ancillary medical services in which a provider comes on-site to perform work using the provider's equipment and/or staff, including, but not limited to X-ray services. The county will pay for all costs associated with mobile services.

1.10 MORTALITY AND MORBIDITY REVIEW. The County acknowledges (a) that it is the responsibility of the County to obtain a review of any death in the facility (as appropriate) pursuant to any applicable statutes (if any), such as Minn. Stat. 241.021 (or any similar act or amendment of that act), (b) that ACH cannot perform such reviews for a facility where it provides medical services, and (c) that the cost of such reviews will be borne by the County.

1.11 OFFICER WELLNESS & CRITICAL INCIDENT EMPLOYEE RAPID RESPONSE (CIERR). The CIERR program is a free staff support service. This program helps to support law enforcement (field and facility), first responders, and health care professionals and mitigate stress reactions in both personal and professional capacities. Contact with CIERR can be initiated by the professional in need of services or Freedom Behavioral Health, Inc. can initiate contact with notification from leadership within the department that the individual would benefit from the services. Unless there are safety concerns, the contacts are treated as confidential.

1.12 OFF-SITE SERVICES. Off-site services are defined as medical services including, but not limited to, consultation services, dental care not performed on-site, diagnostic testing (including but not limited to covid testing), hospital services, medically-indicated emergency ground ambulance transportation, mental health services not performed on-site, laboratory services that are drawn off-site, and specialty services. It is the policy of ACH to provide our health care professionals the freedom to provide care without limitation by approval process for outside care, etc. Each situation should be addressed on a case-by-case basis. ACH does not have standing orders. The county will pay for any costs associated with off-site services.

1.13 OTHER SERVICES AND EXPENSES. ACH may not provide and will not pay for any services, supplies and/or equipment which are not specifically contained in this agreement.

1.14 PHARMACEUTICALS. The county will pay for pharmaceuticals. The county agrees to allow home medications in the facility when they are able to be properly verified. It is the policy of ACH to provide our health care professionals the freedom to provide care without limitation by prescription formulary, corporate approval for expensive medication, etc. Each situation should be addressed on a case-by-case basis. ACH does not have standing orders. ACH does not have a formulary.

1.15 STAFFING.

1.15.1 CANCELATIONS. If the county cancels a worker with less than 24 hours' notice prior to the start of the worker's shift, then the county agrees to pay for the worker's shift.

1.15.2 CREDITS. ACH pays its people well based on several factors including but not limited to experience in correctional healthcare. Therefore, ACH will not issue credits for differences in licensure; i.e., nurse practitioner vs. M.D., LPN vs. RN, etc. (For example, nurse practitioners are not necessarily paid less than M.D.s; LPNs are not necessarily paid less than RNs, etc.)

1.15.3 MEAL BREAKS. It is understood and agreed that during unpaid meal break(s), workers are (1) allowed to leave their duty post and (2) completely relieved from all duties. If the facility requires the worker to be "on call" during meal break(s) so that they may respond to an emergency, then the worker is considered to be "on duty" and the meal break(s) will be paid for by the county.

1.15.4 MEDICAL PRESCRIBER. A prescriber will visit the facility one time every other week (or as otherwise agreed by the county and ACH) and will stay until their work is completed. A prescriber will be available by telephone to the facility and health care teams on an on-call basis, 7 days per week, 24 hours per day, 365 days a year. For onsite visits that fall on holidays, paid time off, or sick time, ACH endeavors to provide replacement onsite coverage, and if it is unable to do so, ACH and the county will negotiate a mutually agreeable remedy (such as crediting back 75% of the wages of the particular worker) (the other 25% pays for telephone on-call).

1.15.5 NURSING. ACH will provide on-site nursing coverage for 32 hours per week on a schedule approved by the county. ACH does not and will not put nurses on-call. The county agrees to pay, on a monthly basis, for extra hours worked (at the prevailing wage and benefit rate of the particular worker). For hours of absence due to holidays, paid time off, or sick time, the hours will not be replaced or credited (because the worker is still being paid for the time off). For other absences, ACH endeavors to provide replacement coverage, and if it is unable to do so, ACH and the county or designee will negotiate a mutually agreeable remedy (such as crediting back the wages of the particular worker).

1.15.6 ON-CALL QUALIFIED MENTAL HEALTH PROFESSIONAL (QMHP). Upon the facility's request, ACH will provide a QMHP at the rate of $150 per hour (with a minimum of 1 hour per visit). Services may be provided in-person or via tele-health (as mutually agreed upon). QMHP responsiveness will depend upon the amount of notice given, and the mutually agreed upon schedule.

1.15.7 TELEHEALTH. When agreed to between the county and ACH, providers may deliver patient care via telehealth.

1.16 TUBERCULOSIS (TB) TESTING. ACH will perform TB skin tests as directed by the county. The county will pay for the TB serum and related supplies.

## ARTICLE 2:
## THE COUNTY

2.1 AUTOMATED EXTERNAL DEFIBRILLATORS (AEDs). The duty to purchase, provide, inspect, and maintain the facility's AEDs is, and always will be, vested in the county. This agreement does not result in the assumption of those duties by ACH or its people. While ACH and its people may assist the county, ultimately the county specifically retains the duties and obligations with respect to AEDs. ACH and its people will assume no responsibility for and will not be liable for the facility's lack of AED(s) and/or defective and/or non-working AEDs in the facility.

2.2 CO-PAY. Patients will be seen by the health care team regardless of their ability to pay.

2.3 COUNTY'S POLICIES, PROCEDURES. All policies, and procedures will at all times remain the property of the county and will remain at the facility. ACH may make recommendations to the county's health care policies and procedures. Those recommendations are made for the county's

consideration. ACH operates within the county's policies and procedures. It is the policy of ACH to provide our health care professionals the freedom to provide care without limitation by prescription formulary, approval process for outside care, etc. The materials in this section are for general information purposes only. That information should be treated as guidelines, not rules. The information is not intended to establish a standard of medical care and is not a substitute for common sense. The information is not legal advice, is not to be acted on as such, may not be current, and is subject to change without notice. Each situation should be addressed on a case-by-case basis. ACH does not have standing orders. ACH does not have a formulary.

2.4 CPR CARDS. ACH will not pay for CPR cards for county workers.

2.5 DUTY TO PROTECT PATIENTS. The non-delegable duty to protect patients is, and always will be, vested in the county. This agreement does not result in the assumption of a non-delegable duty by ACH. As such, the county specifically retains the duty and obligation for security of the patients. This duty extends to the control of patient movement. ACH and its personnel will assume no responsibility for the movement of patients and assume no responsibility for patient protection at any time.

2.6 ELECTRONIC COMMUNICATIONS. The county agrees to provide to ACH copies of any electronic communications between ACH and ACH's workers and independent contractors in the county's possession (including stored on the county's email servers) as requested by ACH. The county agrees to treat electronic communications between ACH and its workers and independent contractors as confidential and agrees not to share those communications with any third party unless required by law.

2.7 WORKER RAIDING (ANTI-POACHING / NON-SOLICITATION AGREEMENT). ACH makes a significant investment in the training and professional development of our workers and independent contractors. As a result, ACH does not expect the county to offer employment to or otherwise "poach" or solicit workers or independent contractors **and the county is specifically prohibited from doing the same**. If the county should hire any worker or independent contractor during this agreement's term or within 1 year after this agreement's termination, the county agrees to pay ACH a professional replacement fee of $10,000 or 10% of this contract price, whichever is greater, for each worker or independent contractor, with the following exception: this does not apply to any person who was employed by the county prior to this agreement. It is expressly agreed by ACH and the county that the payment under this provision does not constitute a penalty and that the parties, having negotiated in good faith and having agreed that the payment is a reasonable estimate of damages in light of the anticipated harm caused by the breach related thereto and the difficulties of proof of loss and inconvenience or nonfeasibility of obtaining any adequate remedy, are estopped from contesting the validity or enforceability of such payment.

2.8 MEDICAL AND MENTAL HEALTH RECORDS. Patient medical and mental health records will always be the property of the county and will remain in the facility. The county agrees to provide copies of those records to ACH when requested.

2.9 MEDICAL EQUIPMENT (DURABLE). The county pays for medical equipment. At the county's request, ACH will assist the county in securing the equipment at cost-effective pricing. Typical durable medical equipment expected in a medical unit would be: exam table, exam stool, ophthalmic / otoscope, peak flow meter, digital thermometer, stethoscope, X-large and large blood pressure cuffs, refrigerator (small), and scales. Medical equipment will be the property of the county.

2.10 NON-MEDICAL CARE OF PATIENTS. The county will provide and pay for non-medical needs of the patients while in the facility, including, but not limited to: daily housekeeping services; dietary services, including special supplements, liquid diets, or other dietary needs; building maintenance services; personal hygiene supplies and services; clothing; and linen supplies.

2.11 NURSING LICENSURE. ACH's preference is to run a health care program using RNs. Ultimately, the level of nursing licensure ACH provides at the facility is the county's decision (RN vs. LPN). ACH does not and will not put nurses on-call.

2.12 OFFICE EQUIPMENT (DURABLE). The county will provide use of county-owned office equipment and utilities in place at the facility's health care unit. Typical office equipment expected in a medical unit would be a locking file (recommended four-drawer); paper punch; staple remover; stapler; cabinet for storing medical supplies such as Band-Aids, gauze, etc.; computer; fax machine; copier / printer; and toner. Upon termination of this agreement, the office equipment will be in good working order, with allowances made for reasonable wear and tear.

2.13 OFFICE SUPPLIES (DISPOSABLE). The county will provide disposable office supplies, such as medical charts, paper, pens, staples, and Post-It notes which are required for the provision of patient health care services.

2.14 OFFICER TRAINING. The duty to train the officer(s) is and always remains vested in the county. Upon request of the county, ACH may assist in training for officer(s) on certain topics as determined by the county. The county is solely responsible for overall operation of the facility, including medical care. The county maintains ultimate responsibility for training and supervising its correctional officers, including but not limited to emergency procedures, ensuring sick calls are passed along to the medical team, and properly distributing medications (where appropriate).

2.15 PREVENTATIVE SERVICES. If the county requests preventative services (such as flu shots, covid vaccinations, etc.) for incarcerated patients or county workers, the county will pay for it. ACH may provide, but will not pay for, preventative services. Upon the county's request, ACH will secure the vaccination (for example) and related supplies (if applicable) through the correctional pharmacy or health department, then bill the county for any costs, and the county agrees to pay.

2.16 RECRUITING.

2.16.1 DECLINING APPLICANTS FROM ACH SO THE COUNTY MAY EMPLOY THEM DIRECTLY. ACH makes a significant investment in the recruiting of new applicants and acknowledges the county has final approval of who may enter the facility. As a result, ACH does not expect the county to deny approval of an applicant presented to them in order for the county to employ that person directly. If, during the term of this agreement or within 1 year after this agreement's termination, the county should hire an applicant who was presented to them by ACH and denied approval by the county, the county agrees to pay ACH 30% of the applicant's first year's salary/compensation as a recruiting fee for each applicant.

2.16.2 DECLINING TO FILL A POSITION AFTER ACH INCURS ADVERTISING AND RECRUITING COSTS. ACH makes a significant investment in the advertising and recruiting of new applicants and acknowledges the county has final approval of the staffing level at the facility. As a result, ACH does not expect the county to decline to fill a position after ACH has incurred advertising and recruiting costs. If, during the term of this

agreement, ACH should begin advertising and recruiting for a position(s), and the county subsequently decides not to fill that position(s), the county agrees to pay ACH the actual costs of advertising and recruiting plus 30%.

2.17 SECURITY. The county will maintain responsibility for the physical security of the facility and the continuing security of the patients. The county understands that adequate security services are necessary for the safety of the agents, workers, and subcontractors of ACH, as well as for the security of patients and officer(s), consistent with the correctional setting. The county will provide security sufficient to enable ACH and its personnel to safely provide the health care services described in this agreement. The county will screen ACH's proposed staff to ensure that they will not constitute a security risk. The county will have final approval of ACH's workers and independent contractors regarding security/background clearance. Should the facility unreasonably withhold security clearance and/or withhold security clearance on an unreasonably high quantity of proposed staff, it places an excessive burden on ACH to staff the facility. In that case, ACH may hire Agency worker(s) to temporarily staff the facility, and the county agrees to pay the difference between the Agency rate(s) and ACH rate(s).

2.18 STAFFING. The county agrees that mental health services at the facility will be provided by the county and ACH has no responsibility under this agreement to provide mental health services at the facility. The parties further agree that the mental health team provided by the county will work cooperatively with ACH to effectively carry out the terms and conditions of this agreement. ACH will not be responsible for the training of the county's mental health team.

## ARTICLE 3: COMPENSATION/ADJUSTMENTS

3.1 ANNUAL AMOUNT/MONTHLY PAYMENTS. The county agrees to pay $209,999 per year to ACH under this agreement. To do so, the county agrees to make monthly payments of $17,499.92 to ACH during the term of this agreement. ACH will bill the county approximately 30 days prior to the month in which services are to be rendered. The county agrees to pay ACH within 30 days of receipt of the bill. If the invoice is not paid within 30 days, the county agrees to pay a 1.5% per month finance charge.

3.1.1 ELECTRONIC PAYMENTS. The county agrees to pay ACH electronically through the Automated Clearing House. If the county does not want to pay electronically, then the county agrees to pay an additional 2% per month charge. If the county believes it is statutorily exempt, please provide the statute citation.

3.1.2 ANNUAL AMOUNT UPON RENEWAL. Upon the annual anniversary of the commencement of services under this agreement, the annualized amount of increase for compensation and per diem rates (and any other contracted rates, including the on-call QMHP rate, for example) will be the rolling 12-month Consumer Price Index (CPI) for Medical Care or 7%, whichever is higher, **but will not exceed 10%**.

3.2 FUNDING THE FACILITY'S HEALTH CARE PROGRAM. It is ultimately the responsibility of the county to appropriately fund the facility's health care program. As a result, ACH's health care program at the facility (staffing, etc.) is customized and approved by the county.

3.3 QUARTERLY ADJUSTMENTS.

3.3.1 AVERAGE DAILY POPULATION (ADP). ADP for a given quarter will be determined from the facility census records. For billing purposes, the patient ADP will be 35. Patients who are not presently incarcerated in the facility (i.e., persons on electronic monitoring or probation, or who are hospitalized, or in halfway housing or early release housing) should not be counted in either ADP reported to ACH by the county. The ADPs reported to ACH should only include those patients presently incarcerated in the facility.

3.3.2 PER DIEM. When the ADP exceeds or falls below the contracted rate in any calendar quarter, the compensation variance will be figured on the average number of patients above or below the contracted ADP for that quarter multiplied by the per diem rate of $0.43 per patient per day. (Example: If the ADP for a quarter is 10 above the contracted ADP, additional compensation due will be calculated as follows: 10 x $0.43 x 91)

3.3.3 RECONCILIATION. Any contract amount in arrears (or amount to be credited back to the county) will be settled through reconciliation on the first monthly invoice prepared after reconciliation. No credits will be issued after 90 days.

## ARTICLE 4:
## TERM AND TERMINATION

4.1 TERM. The term of this agreement will begin on _____ at 12:01 A.M. and will continue in full force and effect until December 31, 2026 at 11:59 P.M., unless earlier terminated, extended, or renewed pursuant to this agreement. This agreement will automatically renew for successive 3-year periods unless either party gives 30 days' written notice prior to the end of a term.

4.1.1 "CRISIS MODE" START-UP. It is understood and agreed that ACH was asked to start this project emergently. As a general rule, ACH has ~180 days to appropriately "start up" and transition a project. As a result, the parties agree to work together collaboratively for a successful transition, although "success" shouldn't be measured until on or about 6/1/2023. Holiday and/or "crisis" startups (less than 180 days between signed contract and startup date) require an additional fee of 2 weeks' contract price to mobilize extra startup team members, and the county agrees to pay this fee.

4.2 TERMINATION.

4.2.1 TERMINATION FOR LACK OF APPROPRIATIONS. It is understood and agreed that this agreement will be subject to annual appropriations by the county. If funds are not appropriated for this agreement, then upon exhaustion of such funding, the county will be entitled to immediately terminate this agreement. Recognizing that such termination may entail substantial costs for ACH, the county will act in good faith and make every effort to give ACH reasonable advance notice of any potential problem with funding or appropriations. The county agrees to pay for services rendered up to the point of termination.

4.2.2 30-DAY OUT CLAUSE. Notwithstanding anything to the contrary contained in this agreement, the county or ACH may, without prejudice to any other rights they may have, terminate this agreement by giving 30 days' advance written notice to the other party. If the county gives ACH less than 30 days' advance written notice, the county agrees to pay to ACH 1-month's contract price as an early termination fee.

## ARTICLE 5:
## GENERAL TERMS AND CONDITIONS

5.1 ADVICE OF COUNSEL. Each of the parties (a) has had the opportunity to seek counsel, legal or otherwise, prior to entering into this agreement, (b) is freely entering into this agreement of his/her or its own volition, and (c) understands and agrees that this agreement will be construed as if drafted by both parties and not by one party solely.

5.2 AUTHORITY. The persons signing below represent that they have the right and authority to execute this agreement for their respective entities and no further approvals are necessary to create a binding agreement.

5.3 COMPLIANCE WITH FEDERAL, STATE AND LOCAL LAWS. The county and ACH agree that no party will require performance of any ACH or county worker, agent or independent contractor that would violate federal, state and/or local laws, ordinances, rules and/or regulations. If the county elects not to follow any federal, state, or local law, the parties agree the county will be responsible for all costs associated with noncompliance. The county will be responsible for any additional services required at the facility as the result of governmental (including, but not limited to, Centers for Disease Control and Prevention, Department of Justice, health department, Immigration and Customs Enforcement, Department of Corrections, Federal Bureau of Prisons, or United States Marshals Service) investigation, mandate, memorandum, or order. Should ACH be asked to provide substantial new medical treatment, the county will pay for it, unless specifically agreed upon in writing between ACH and the county.

5.4 COUNTERPARTS; HEADINGS. This agreement may be executed in counterparts, each of which will be an original and all of which will constitute one agreement. The headings contained in this agreement are for reference purposes only and will not affect in any way the meaning or interpretation of this agreement. The term "patient" includes incarcerated detainees and inmates.

5.5 EMAIL ACCOUNTS. As a general rule, ACH will not provide frontline email accounts. If the county would prefer that ACH issue email accounts, then the county agrees to pay the additional costs for the licenses (i.e., in 2022, ~$72/year per email account).

5.6 ENTIRE AGREEMENT; AMENDMENT. This agreement represents the entire understanding of the parties with respect to the subject matter hereof, supersedes and cancels all prior agreements, understandings, arrangements, or representations between the parties with respect to such subject matter, and may only be amended by written agreement of both parties. The parties agree that their performances hereunder do not obligate either party to enter into any further agreement or business arrangement.

5.7 EQUAL EMPLOYMENT OPPORTUNITY. It is the policy of ACH to provide equal employment opportunities to all workers and applicants for employment without regard to race, color, religion, sex, national origin, disability, age, or genetics. This policy applies to all terms and conditions of employment including, but not limited to, recruitment, hiring, placement, promotion, termination, layoff, recall, transfer, leaves of absence, benefit plans, all forms of compensation, and training.

5.8 EXCUSED PERFORMANCE. In case performance of any terms or parts hereof will be delayed or prevented because of compliance with any law, decree, or order of any governmental agency or authority of local, state, or federal governments or because of riots, public disturbances, strikes, lockouts, differences with workers, fires, floods, Acts of God, pandemics, or any other reason whatsoever which is not within the control of the parties whose performance is interfered with and

which, by the exercise of reasonable diligence, said party is unable to prevent, the party so suffering may at its option, suspend, without liability, the performance of its obligations hereunder during the period such cause continues.

5.9 FILMING. ACH does not consent to the filming of its workers for any commercial purpose including, but not limited to, documentaries, docuseries (including, but not limited to, "60 Days In"), etcetera. If the facility and/or county decide to engage in such a project, they agree to notify ACH's legal department at least 90 days prior to filming, at 309-692-8100; facsimile: 309-214-9977; or email: Contracts@advancedch.com. ACH reserves the right to terminate the agreement prior to the beginning of the filming of such a project. ACH will have no obligation under this agreement to maintain insurance coverage against any loss or damage caused or necessitated by the filming of such a project. The county agrees to hold harmless and indemnify ACH and its workers against any loss or damage, including reasonable attorneys' fees and other costs of litigation, caused or necessitated by the filming of such a project.

5.10 FURTHER ACTS. The parties agree to perform any further acts and execute and deliver any further documents that may be reasonably necessary to carry out the provisions of this agreement.

5.11 GOVERNING LAW. This agreement will be governed by the laws of the State of Minnesota (without reference to conflicts of laws principles).

**5.12 HOLD HARMLESS AND INDEMNIFY.**

**5.12.1 ACH will hold harmless and indemnify the county (together with its respective workers) against any loss or damage, including reasonable attorneys' fees and other costs of litigation, solely caused or necessitated by the negligent, reckless, intentional, or deliberately indifferent conduct of ACH or its workers, which is related to medical treatment or care provided by ACH. With respect to any claim for indemnification, the county will (i) give written notice thereof to ACH within a reasonable period following the event or occurrence as to which the right to indemnification is or may be asserted and (ii) allow ACH (including the workers, agents, and counsel) reasonable access to any of its workers, property, and records for the purposes of conducting an investigation of such claim and for the purpose of obtaining statements, photographs, and taking such other steps as may be reasonable to preserve evidence of the occurrence on which the claim is based. If the county denies ACH reasonable access as set forth, after written request therefore, the county will assume sole responsibility for the claim for which indemnification is sought and will not be entitled to indemnity.**

**5.12.2 The county will hold harmless and indemnify ACH (together with its respective workers) against any loss or damage, including reasonable attorneys' fees and other costs of litigation, solely caused or necessitated by the negligent, reckless, intentional, or deliberately indifferent conduct of the county or its workers, which is related to medical treatment or care provided by ACH. With respect to any claim for indemnification, ACH will (i) give written notice thereof to the county within a reasonable period following the event or occurrence as to which the right to indemnification is or may be asserted and (ii) allow the county (including the workers, agents, and counsel) reasonable access to any of its workers, property, and records for the purposes of conducting an investigation of such claim and for the purpose of obtaining statements, photographs, and taking such other steps as may be reasonable to preserve evidence of the occurrence on which the claim is based. If ACH denies the**

**county reasonable access as set forth, after written request therefore, ACH will assume sole responsibility for the claim for which indemnification is sought and will not be entitled to indemnity.**

5.13 INDEPENDENT CONTRACTORS. ACH may engage certain health care professionals as independent contractors rather than workers. The county understands and acknowledges that some physicians, advanced practice providers, nurses, mental health workers, consultants, specialists, and other allied health professionals practicing with ACH ("health care team members") are not workers or associates of ACH; and that ACH is not responsible for their opinions, decisions or medical procedures performed.

**5.14 INSURANCE.**

**5.14.1 ACH or its subsidiary(s) will maintain professional liability insurance, including civil rights liability, with minimum limits of $1,000,000 each occurrence, $3,000,000 annual aggregate.**

**5.14.2 ACH or its subsidiary(s) will maintain workers' compensation and employer's liability insurance covering its workers while on the facility's premises that complies with the statutory minimum requirements in the applicable state(s).**

**5.14.3 ADDITIONAL INSUREDS. ACH or its subsidiary(s) will cover the county as an additional insured for the sole negligence of ACH or its subsidiary(s) (as appropriate) under the professional liability portion of insurance.**

5.15 INTERGOVERNMENTAL AGREEMENTS (IGAs) (PIGGYBACK). ACH agrees to allow the county to authorize other government agencies to purchase the proposed items by issuance of a purchase order at the same terms and conditions as this agreement, and to make payments directly to ACH during the period of time that this agreement is in effect.

5.16 MINNESOTA DATA PRACTICES ACT. ACH understands it may be subject to the Minnesota Data Practices Act.

5.17 NO GRANT OF RIGHTS. Each of the parties understands and agrees that no grant or license of a party's rights in any patent, trademark, trade secret, copyright and/or other intellectual property right is made hereby, expressly or by implication.

5.18 NO RELATIONSHIP OR AUTHORITY. The parties agree that ACH will at all times be an independent contractor in the performance of the services hereunder, and that nothing in this agreement will be construed as or have the effect of constituting any relationship of employer/employee, partnership, or joint venture between the county and ACH. ACH does not have the power or authority to bind the county or to assume or create any obligation or responsibility on the county's behalf or in the county's name, except as otherwise explicitly detailed in this agreement, and ACH will not represent to any person or entity that ACH has such power or authority. ACH will not act as an agent nor will ACH be deemed to be an employee of the county for the purposes of any employee benefit program.

5.19 NOTICE. Any notice required or permitted to be given hereunder will be in writing and delivered to the respective addresses in this section or such other addresses as may be designated in writing by the applicable party from time to time and will be deemed to have been given when sent. To the county: Aitkin County Jail, 217 2nd St NW, Aitkin, MN 56431. To ACH: Advanced Correctional

Healthcare, Inc., Attn: Legal, 720 Cool Springs Blvd., Suite 100, Franklin, TN 37067; facsimile: 309.214.9977; email: Contracts@advancedch.com.

5.20 OTHER CONTRACTS AND THIRD PARTY BENEFICIARIES. The parties acknowledge that ACH is not bound by or aware of any other existing contracts to which the county is a party and which relate to the provision of health care to patients at the facility. The parties agree that they have not entered into this agreement for the benefit of any third person(s) and it is their express intention that this agreement is intended to be for their respective benefits only and not for the benefits of others who might otherwise be deemed to constitute third party beneficiaries thereof.

5.21 SEVERABILITY. If any provision of this agreement, or any portion thereof, is found to be invalid, unlawful, or unenforceable to any extent, such provision will be enforced to the maximum extent permissible so as to effect the intent of the parties, and the remainder of this agreement will continue unaffected in full force and effect. The parties will negotiate in good faith an enforceable substitute provision for such invalid provision that most nearly achieves the same intent and economic effect.

5.22 SUBCONTRACTING. ACH may subcontract services including, but not limited to, biomedical waste disposal, electronic medical records, mobile services, pharmaceutical services, staffing, and training. For example, ACH subcontracts staffing to USA Medical & Psychological Staffing, LLC; behavioral health care to Freedom Behavioral Health, S.C.; EMR to Advanced Inmate Medical Management, LLC; and training to Spark Training, LLC.

5.23 TRAINING MATERIAL. Information in any training material should be treated as guidelines, not rules. The information presented is not intended to establish a standard of medical care and is not a substitute for common sense. The information presented is not legal advice, is not to be acted on as such, may not be current, and is subject to change without notice. Each situation should be addressed on a case-by-case basis.

5.24 WAIVER. Any waiver of the provisions of this agreement or of a party's rights or remedies under this agreement must be in writing to be effective. Failure, neglect, or delay by a party to enforce the provisions hereof or its rights or remedies at any time, will not be construed as a waiver of such party's rights or remedies hereunder and will not in any way affect the validity of this agreement or prejudice such party's right to take subsequent action.

**IN WITNESS WHEREOF**, the parties hereto have hereunto set their hands and seals the date and year written below.

**ADVANCED CORRECTIONAL HEALTHCARE, INC.**

_____ _____

Jessica K. Young, Esq., CCHP-A Date
President & Chief Executive Officer

**COUNTY OF AITKIN, MINNESOTA**

_____ _____

Sheriff Date

Please complete and return via email to Contracts@advancedch.com.

If this contract is not returned to ACH by 2/20/23, the price will increase.

# Board of County Commissioners Agenda Request

**9A**
Agenda Item #

**Requested Meeting Date:** February 13, 2024

**Title of Item:** 2024 Comprehensive Plan

| | | |
|---|---|---|
| ☑ REGULAR AGENDA | **Action Requested:** | ☐ Direction Requested |
| ☐ CONSENT AGENDA | ☑ Approve/Deny Motion | ☐ Discussion Item |
| ☐ INFORMATION ONLY | ☐ Adopt Resolution (attach draft) | ☐ Hold Public Hearing* |
| | **provide copy of hearing notice that was published* | |

**Submitted by:**
Kameron Genz

**Department:**
Community Corrections

**Presenter (Name and Title):**
Kameron Genz, Director

**Estimated Time Needed:**
5 minutes

**Summary of Issue:**

Review of 2024 Comprehensive Plan. The plan is to be submitted to MN DOC. The plan was reviewed by the Community Corrections Advisory Board and they recommend the plan be submitted to the County Board for approval. The report is attached.

**Alternatives, Options, Effects on Others/Comments:**

The Comprehensive Plan is ready for review by the County Board prior to submission to MN Department of Corrections.

**Recommended Action/Motion:**

It is respectfully requested that the Aitkin County Board of Commissioners approve the 2024 Comprehensive Plan for submission to MN Department of Corrections.

**Financial Impact:**

*Is there a cost associated with this request?* ☐ *Yes* ☑ *No*

*What is the total cost, with tax and shipping? $*

*Is this budgeted?* ☑ *Yes* ☐ *No* *Please Explain:*

The CCA Subsidy, for which the Comprehensive Plans are required, is budgeted annually.

Legally binding agreements must have County Attorney approval prior to submission.

AITKIN COUNTY

EST 1857

Community Corrections

# 2024-2027 Comprehensive Plan

# INTRODUCTION

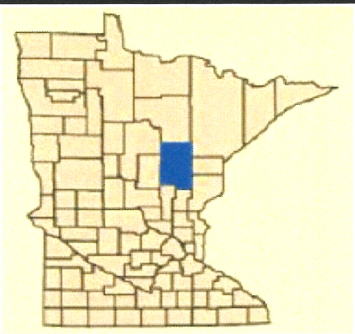

Aitkin County is located in central Minnesota. The region is dominated by services and trade in the tourism, lumber and agriculture industries. Large employment sources include county government, 3 schools, and 1 hospital. Since the region is a tourism and retirement destination, the population fluctuates greatly, often doubling in summer months.

Aitkin County is governed by a five-member county board employing the county administrator model of management. Aitkin County is in the Ninth Judicial District. The Ninth Judicial District consists of seventeen counties in Northwest to North Central Minnesota, including Aitkin, Beltrami, Cass, Clearwater, Crow Wing, Hubbard, Itasca, Kittson, Koochiching, Lake of the Woods, Mahnomen, Marshall, Norman, Pennington, Polk, Red Lake, Roseau.

Aitkin County is comprised of 1,995 total square miles. The city of Aitkin is the county seat. Other cities in the county include: McGregor, McGrath, Hill City, Tamarack, as well as, 40 townships.

| | |
|---|---|
| **Population** *(official 2020 census = 15,697)* | 16,126 |
| Under age 5 ↓ | 3.3% |
| Under age 18 ↓ | 15.2% |
| Over age 65 ↑ | 34.1% |
| Female ↓ | 49.2% |
| Persons in poverty ↑ | 13.5% |
| Veterans ↑ | 9.0% |
| **Race** | |
| White ↑ | 94.9% |
| Black ↓ | 0.6% |
| Native American ↑ | 2.4% |
| Asian ↓ | 0.3% |
| Multi-Racial/other | 1.8% |
| **Housing and Income** | |
| Housing units | 14,265 |
| Median Home Value of owner-occupied housing units ↓ | $222,100 |
| Median Household income ↓ | $56,406 |
| Median gross rent ↓ | $815 |
| Unemployment ↑ | 5.3% |
| **Education** | |
| High school graduate or higher (age 25+) ↓ | 92.6% |
| Bachelor's Degree or higher (age 25+) ↓ | 18.3% |

Source: U.S. Census (estimates as of 2023) ↑ *Higher than MN rate* ↓ *Lower than MN rate*

# ADMINISTRATION AND ORGANIZATION OF CORRECTIONAL SERVICES

## VISION

It is the vision of Aitkin County Community Corrections to reduce recidivism within our community and work with our local stakeholders and other Minnesota Correctional Agencies to promote positive change among our clientele.

## MISSION

It is the mission of Aitkin County Community Corrections to promote public safety and victim restoration by holding offenders accountable, exercising an evidence-based model of correctional services, and actively providing offenders opportunities to become law-abiding citizens.

## ORGANIZATIONAL STRUCTURE

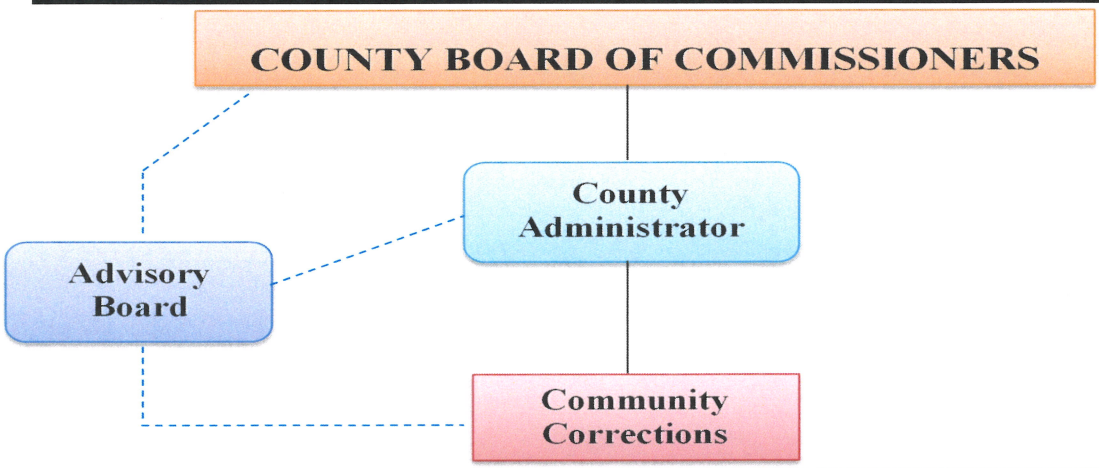


### Aitkin County Board 2024

The county board's role in regard to Community Corrections is: 1) Establish the budget for the department. 2) To determine, establish, continue, modify and terminate Aitkin County correctional services and programs with input from the Director and the Corrections Advisory Board. 3) Approve and authorize the application of the annual comprehensive plan. 4) Ensure compliance with the Community Corrections Act. 5) Establish all matters of policy in relation to correctional services under its authority. The 2024 Aitkin County Board is comprised of the five commissioners from each district.

| | |
|---|---|
| J. Mark Wedel (Chair) | District #1 |
| Laurie Westerlund | District #2 |
| Travis Leiviska | District #3 |
| Bret Sample (Vice Chair) | District #4 |
| Michael Kearney | District #5 |
| *Jessica Seibert* | *Aitkin County Administrator* |

## 2024 Aitkin County Board Members

## Aitkin County Community Corrections Advisory Board 2024

The Advisory Board is appointed by the Aitkin County Board to oversee the corrections planning process and to take an active role in the development of the Comprehensive Plan. The advisory board meets quarterly.

**Members**

Nancy Johnson-Houg - Citizen Member (Board Chair)
J. Mark Wedel - Commissioner, Aitkin Co.
Laurie Westerlund - Commissioner, Aitkin Co.
Honorable David Hermerding - Judiciary
Sheriff Dan Guida - Law Enforcement
Rebecca Persons - Social Services
Kameron Genz - Community Corrections
Cheryl Meld - Education
Rachele Moose - Citizen Minority
Anne Marcotte - Defense
James Ratz - Prosecution
Gabrea Anderson - Victim Services

**Ex-Officio Advisory Board members**

Mark Smith - State Liaison, Minnesota Department of Corrections

## AGENCY TRAINING REQUIREMENTS

Aitkin County Community Corrections requests enrollment in Statewide Training Academy as soon as possible after an agent is hired and staff is required to attend whenever enrollment is then granted. Sex Offender Training 101 is required for any agent planning to supervise sex offenders or POR cases. EBP refresher courses are required for all trained staff as available. Agents are encouraged to attend statewide trainings through MACCAC, MCA, CPO and DOC partners, and annual conferences. They are encouraged to complete online courses at their convenience. In addition, the agency requires mandatory training though the county including: preventing sexual harassment; bloodborne pathogens; and hazard communications. Our agency participates in intraoffice communities of practice. We have recently hired a Evidence Based Practices Coordinator/Assistant Agent who will be trained in all five current EBP skills and will provide structured coaching and training of staff.

# OVERVIEW OF SUPERVISION POLULATION
# (PROBATION, SR/ISR, PRE-TRIAL)

## Probation Survey Report for Aitkin County Community Corrections

Reporting Period: Jan thru Dec 2020

Report Date: 01/01/2021

| | Prior Year End | Entries | Removals | Period Ending Total |
|---|---|---|---|---|
| Felony | 252 | 78 | 118 | 213 |
| Gross Misdemeanor | 253 | 78 | 110 | 223 |
| Misdemeanor | 93 | 33 | 59 | 64 |
| Juvenile | 18 | 24 | 23 | 19 |
| Totals | 616 | 213 | 310 | 519 |

| | Male | Female | Hispanic | Non-Hispanic / Unknown |
|---|---|---|---|---|
| Felony | 160 | 53 | 3 | 210 |
| Gross Misdemeanor | 161 | 62 | 2 | 221 |
| Misdemeanor | 42 | 22 | 1 | 63 |
| Juvenile | 16 | 3 | 0 | 19 |
| Totals | 379 | 140 | 6 | 513 |

| | White | Black | American Indian | Asian | Other |
|---|---|---|---|---|---|
| Felony | 175 | 4 | 21 | 0 | 13 |
| Gross Misdemeanor | 178 | 7 | 23 | 1 | 14 |
| Misdemeanor | 54 | 2 | 3 | 0 | 5 |
| Juvenile | 13 | 1 | 4 | 0 | 1 |
| Totals | 420 | 14 | 51 | 1 | 33 |

| | Felony | Gross Misd. | Misdemeanor | Juvenile | Total |
|---|---|---|---|---|---|
| **Arson** | 2 | 0 | 0 | 0 | 2 |
| **Assault** | 10 | 2 | 2 | 1 | 15 |
| **Assault-Domestic** | 18 | 5 | 7 | 1 | 31 |
| **Against Family** | 0 | 2 | 0 | 0 | 2 |
| **Against Justice** | 6 | 2 | 1 | 0 | 9 |
| **Against Government** | 0 | 0 | 0 | 0 | 0 |
| **Burglary** | 18 | 1 | 0 | 2 | 21 |
| **Counterfeiting / Fraud** | 10 | 1 | 0 | 0 | 11 |
| **Crim Sexual Conduct** | 17 | 1 | 1 | 0 | 19 |
| **Crim Veh Operation – Bodily Harm** | 2 | 1 | 0 | 0 | 3 |
| **Crim Veh Operation – Death** | 1 | 0 | 0 | 0 | 1 |
| **Disturbing Peace** | 2 | 2 | 12 | 1 | 17 |
| **Drugs** | 69 | 25 | 0 | 2 | 96 |
| **DWI** | 26 | 166 | 32 | 0 | 224 |
| **Escape Flight** | 1 | 0 | 0 | 1 | 2 |
| **Gambling** | 0 | 0 | 0 | 0 | 0 |
| **Harassment / Stalking** | 0 | 1 | 1 | 1 | 3 |
| **Homicide** | 1 | 0 | 0 | 0 | 1 |
| **Kidnapping** | 1 | 0 | 0 | 1 | 2 |
| **Misc / Juv / Fed** | 0 | 0 | 1 | 1 | 2 |
| **Obscenity** | 0 | 0 | 0 | 0 | 0 |
| **Other Person** | 0 | 0 | 0 | 0 | 0 |
| **Property Damage** | 2 | 2 | 0 | 3 | 7 |
| **Robbery** | 0 | 0 | 0 | 0 | 0 |
| **Sex Related** | 0 | 0 | 0 | 0 | 0 |
| **Stolen Property** | 4 | 0 | 0 | 0 | 4 |
| **Theft** | 15 | 6 | 1 | 3 | 25 |
| **Traffic** | 0 | 4 | 4 | 1 | 9 |
| **Vehicle Theft** | 0 | 0 | 1 | 0 | 1 |
| **Weapons** | 8 | 2 | 1 | 1 | 12 |
| **[Unknown/NA]** | 0 | 0 | 0 | 0 | 0 |

# Probation Survey Report for Aitkin County Community Corrections

## Reporting Period: Jan thru Dec 2021

## Report Date: 01/01/2022

| | Prior Year End | Entries | Removals | Period Ending Total |
|---|---|---|---|---|
| Felony | 214 | 121 | 127 | 209 |
| Gross Misdemeanor | 222 | 120 | 119 | 221 |
| Misdemeanor | 64 | 55 | 50 | 70 |
| Juvenile | 19 | 21 | 24 | 16 |
| Totals | 519 | 317 | 320 | 516 |

| | Male | Female | Hispanic | Non-Hispanic / Unknown |
|---|---|---|---|---|
| Felony | 156 | 53 | 1 | 208 |
| Gross Misdemeanor | 163 | 58 | 3 | 218 |
| Misdemeanor | 51 | 19 | 1 | 69 |
| Juvenile | 9 | 7 | 0 | 16 |
| Totals | 379 | 137 | 5 | 511 |

| | White | Black | American Indian | Asian | Other |
|---|---|---|---|---|---|
| Felony | 171 | 5 | 23 | 0 | 10 |
| Gross Misdemeanor | 174 | 9 | 21 | 3 | 14 |
| Misdemeanor | 53 | 2 | 5 | 0 | 10 |
| Juvenile | 8 | 1 | 6 | 0 | 1 |
| Totals | 406 | 17 | 55 | 3 | 35 |

| | Felony | Gross Misd. | Misdemeanor | Juvenile | Total |
|---|---|---|---|---|---|
| **Arson** | 1 | 0 | 0 | 0 | 1 |
| **Assault** | 9 | 4 | 2 | 2 | 17 |
| **Assault-Domestic** | 12 | 2 | 11 | 3 | 28 |
| **Against Family** | 0 | 1 | 0 | 0 | 1 |
| **Against Justice** | 7 | 2 | 0 | 0 | 9 |
| **Against Government** | 0 | 0 | 0 | 0 | 0 |
| **Burglary** | 21 | 0 | 0 | 1 | 22 |
| **Counterfeiting / Fraud** | 9 | 0 | 0 | 0 | 9 |
| **Crim Sexual Conduct** | 9 | 0 | 0 | 0 | 9 |
| **Crim Veh Operation – Bodily Harm** | 3 | 3 | 0 | 0 | 6 |
| **Crim Veh Operation – Death** | 1 | 0 | 0 | 0 | 1 |
| **Disturbing Peace** | 0 | 1 | 11 | 0 | 12 |
| **Drugs** | 82 | 22 | 1 | 0 | 105 |
| **DWI** | 33 | 171 | 30 | 0 | 234 |
| **Escape Flight** | 0 | 1 | 0 | 0 | 1 |
| **Gambling** | 0 | 0 | 0 | 0 | 0 |
| **Harassment / Stalking** | 0 | 0 | 2 | 0 | 2 |
| **Homicide** | 0 | 0 | 0 | 0 | 0 |
| **Kidnapping** | 1 | 0 | 0 | 0 | 1 |
| **Misc / Juv / Fed** | 0 | 0 | 1 | 0 | 1 |
| **Obscenity** | 0 | 0 | 0 | 0 | 0 |
| **Other Person** | 0 | 0 | 0 | 0 | 0 |
| **Property Damage** | 0 | 1 | 1 | 2 | 4 |
| **Robbery** | 0 | 0 | 0 | 0 | 0 |
| **Sex Related** | 0 | 0 | 0 | 0 | 0 |
| **Stolen Property** | 3 | 0 | 0 | 0 | 3 |
| **Theft** | 12 | 7 | 2 | 2 | 23 |
| **Traffic** | 0 | 4 | 6 | 4 | 14 |
| **Vehicle Theft** | 0 | 0 | 2 | 1 | 3 |
| **Weapons** | 6 | 2 | 1 | 1 | 10 |
| **[Unknown/NA]** | 0 | 0 | 0 | 0 | 0 |

# Probation Survey Report for Aitkin County Community Corrections

## Reporting Period: Jan thru Dec 2022

## Report Date: 01/01/2023

| | Prior Year End | Entries | Removals | Period Ending Total |
|---|---|---|---|---|
| Felony | 207 | 116 | 138 | 189 |
| Gross Misdemeanor | 224 | 108 | 117 | 216 |
| Misdemeanor | 72 | 87 | 48 | 106 |
| Juvenile | 17 | 34 | 28 | 23 |
| Totals | 520 | 345 | 331 | 534 |

| | Male | Female | Hispanic | Non-Hispanic / Unknown |
|---|---|---|---|---|
| Felony | 143 | 46 | 3 | 186 |
| Gross Misdemeanor | 160 | 56 | 1 | 215 |
| Misdemeanor | 79 | 27 | 1 | 105 |
| Juvenile | 18 | 5 | 1 | 22 |
| Totals | 400 | 134 | 6 | 528 |

| | White | Black | American Indian | Asian | Other |
|---|---|---|---|---|---|
| Felony | 154 | 5 | 21 | 1 | 8 |
| Gross Misdemeanor | 180 | 4 | 19 | 3 | 10 |
| Misdemeanor | 85 | 4 | 10 | 0 | 7 |
| Juvenile | 13 | 1 | 7 | 0 | 2 |
| Totals | 432 | 14 | 57 | 4 | 27 |

| | Felony | Gross Misd. | Misdemeanor | Juvenile | Total |
|---|---|---|---|---|---|
| **Arson** | 2 | 1 | 0 | 0 | 3 |
| **Assault** | 12 | 2 | 6 | 4 | 24 |
| **Assault-Domestic** | 12 | 4 | 15 | 4 | 35 |
| **Against Family** | 0 | 0 | 0 | 0 | 0 |
| **Against Justice** | 5 | 1 | 0 | 0 | 6 |
| **Against Government** | 0 | 1 | 1 | 0 | 2 |
| **Burglary** | 10 | 0 | 0 | 0 | 10 |
| **Counterfeiting / Fraud** | 6 | 0 | 0 | 0 | 6 |
| **Crim Sexual Conduct** | 9 | 2 | 0 | 3 | 14 |
| **Crim Veh Operation – Bodily Harm** | 1 | 5 | 0 | 0 | 6 |
| **Crim Veh Operation – Death** | 2 | 0 | 0 | 0 | 2 |
| **Disturbing Peace** | 0 | 1 | 9 | 1 | 11 |
| **Drugs** | 81 | 18 | 1 | 3 | 103 |
| **DWI** | 28 | 161 | 57 | 0 | 246 |
| **Escape Flight** | 0 | 2 | 0 | 0 | 2 |
| **Gambling** | 0 | 0 | 0 | 0 | 0 |
| **Harassment / Stalking** | 0 | 1 | 1 | 0 | 2 |
| **Homicide** | 0 | 0 | 0 | 0 | 0 |
| **Kidnapping** | 0 | 0 | 0 | 0 | 0 |
| **Misc / Juv / Fed** | 0 | 1 | 0 | 0 | 1 |
| **Obscenity** | 0 | 0 | 0 | 0 | 0 |
| **Other Person** | 0 | 0 | 0 | 0 | 0 |
| **Property Damage** | 0 | 2 | 2 | 2 | 6 |
| **Robbery** | 0 | 0 | 0 | 0 | 0 |
| **Sex Related** | 0 | 0 | 0 | 0 | 0 |
| **Stolen Property** | 4 | 0 | 0 | 2 | 6 |
| **Theft** | 11 | 7 | 1 | 2 | 21 |
| **Traffic** | 0 | 5 | 8 | 1 | 14 |
| **Vehicle Theft** | 0 | 0 | 3 | 0 | 3 |
| **Weapons** | 6 | 2 | 2 | 1 | 11 |
| **[Unknown/NA]** | 0 | 0 | 0 | 0 | 0 |

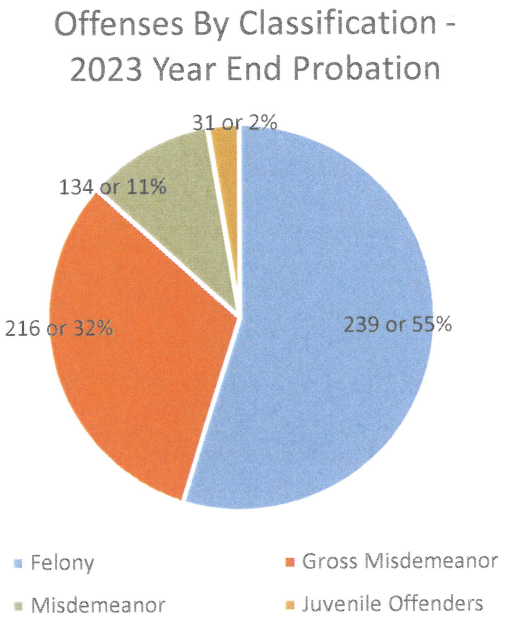


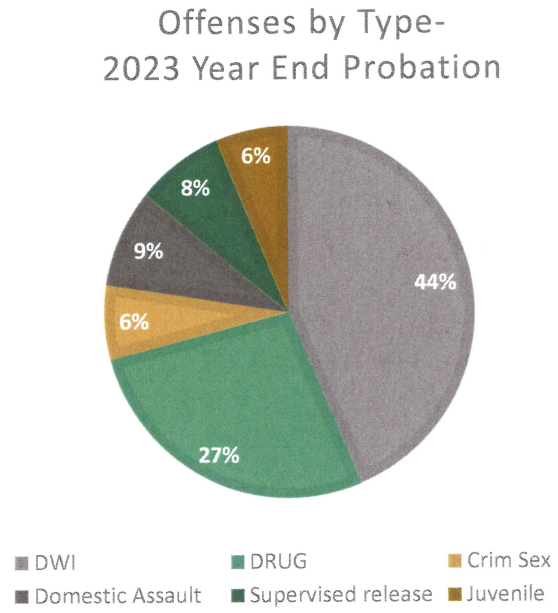


Caseloads are assigned to agents in a manner that works best for our agency and is not wholly defined by offense or risk level specifically.

| Agent | Case Assignment Description | Caseload # approximation |
|---|---|---|
| #1 | Juvenile Probation (incl sex offenses); Adult sex offenses; SR/ISR sex offenses | 46 |
| #2 | M/GM DWIs; CVOs | 101 |
| #3 | Sobriety Court participants and graduates | 17 |
| #4 | Shared caseload of all remaining adult cases (25%); SR/ISR (except SO); MH as assigned | 65 |
| #5 | Shared caseload of all remaining adult cases (25%) agent in training | 21 |
| #6 | Shared caseload of all remaining adult cases (50%); | 65 |
| Admin | Juvenile diversion; EHM only; short terms; admin non monitoring | 74 |
| All | Warrant 93; Felony pretrial 137; Transferred out 216 | 446 |

**Graph & tables are only indicative of active probation supervision and is not inclusive of duties by agents regarding supervised release, pre-sentence, pre-trial, diversion or non monitoring cases.**

Discharges identified as successful or unsuccessful are noted in the following tables. However, the criteria which defines successful or unsuccessful for the purposes of this report, will likely need to be modified for future plans. Date input and supervision standards/definitions will need to be addressed for future reporting. Unfortunately, the extremely short time frame for the turn around of this plan, did not allow for a more accurate representation in this section in particular.

| Row Labels | ADULT DISCHARGES | Count of Case Number |
|---|---|---|
| **S** | | **276** |
| Death | | 22 |
| Discharge Early | | 213 |
| Dismissed-No Conviction Or Adjudication | | 41 |
| **U** | | **207** |
| Discharge Expiration | | 110 |
| Discharge-Formal Adjudication Or Conviction | | 25 |
| Executed | | 72 |
| **(blank)** | | **81** |
| Closed Rejected | | 35 |
| Closed-No Ongoing Responsibilities | | 46 |
| **Grand Total** | | **564** |

| Row Labels | JUVENILE DISCHARGES | Count of Case Number |
|---|---|---|
| **S** | | **48** |
| Discharge Early | | 12 |
| Dismissed-No Conviction Or Adjudication | | 36 |
| **U** | | **22** |
| Discharge Expiration | | 17 |
| Discharge-Formal Adjudication Or Conviction | | 5 |
| **(blank)** | | **4** |
| Closed-No Ongoing Responsibilities | | 4 |
| **Grand Total** | | **74** |

| SUPERVISON LEVEL OF | CURRENT ADULT CASELOAD | ACTUAL # AND % |
|---|---|---|
| **Supervision level** | **# of cases** | **Percent of cases** |
| High/Enhanced | 28 | 8.48% |
| Medium | 30 | 9.09% |
| Low | 147 | 44.55% |
| Admin | 125 | 37.88% |

*Supervision level table does not include juvenile cases, transferred out, warrant, pretrial or supervised release*

# STRATEGIC PLANNING

Over the course of this comprehensive plan, it is the goal of this department to plan and implement regular and consistent programming for clients. We will strive to incorporate all EBP skills into daily contacts with clients. We will utilize the new EBP coordinator position to track various services and outcomes.

We currently address community needs by working with our clients to determine their current level of need and referring most service to providers in our region. We have very limited programming in the county. The use of risk/needs/responsivity assessments and case planning assists with better outcomes for our clients.

Goals for 2024 are to increase daily use of EBP skills, use the LS/CMI and case planning tool more effectively, reduce supervision levels, improve client satisfaction and provide better data input for later evaluation purposes. As a director, my intraoffice goals for 2024 are to retain current staff, support staff wellness, increase collaborative efforts with community partners, begin year round cognitive skill classes.

Additionally, we are looking forward to continued work with the three delivery systems and the Council of State Governments in developing supervision standards, including the risk/needs/responsivity tools, behavior response grid, and improved data input and outcomes reporting.

In 2025, the focus will be on cognitive skills for clients and additional efforts in collaboration with the local workforce center for education and employment information for clients. We would also like to develop a formalized mental health caseload. We currently identify certain clients as in need of additional supports due to mental health concerns but have been limited in our ability to provide more of a wrap around approach. Therefore, we will continue to work with our current partners and hopefully bring in additional partners who are also interested in having a county-wide collaboration of services for this identified population which will increase the client's wellbeing while reducing involvement in the criminal justice system; or at least will reduce the amount of jail time served.

Goals for years #3 and #4 of this plan will be addressed in the interim plan. Upon evaluation of the next 2 years, and with the start of the EBP Coordinator position, we will take time to thoughtfully consider the strategic planning of the remaining two years.

# PRE-TRIAL, DIVERSION AND OTHER SERVICES

## Pre-trial & Diversion

Our agency assists the Courts by providing pre-trial services which include MNPATs, Pre-Plea/Pre-Sentence Investigation Reports, restitution studies, chemical testing, referrals for services, and supervision of juvenile diversion files.

The Aitkin County Probation Agent currently administers a Juvenile Diversion Program in conjunction with the Aitkin County Attorney's Office. The Aitkin County Juvenile Agent oversees the Aitkin County Area Restorative Justice Program for juvenile clients.

## PSI/PDI

When the Court requests this agency to provide reports, we assign the report to an agent and the office assistant collects documentation needed for the agent to make contact with the client and begin the report. Our agency uses statue 609.115 and the additional statutes referenced within, as well as the Minnesota Sentencing Guidelines, to guide our Pre/Post Sentence Investigation Reports process. Victim contact is included in this process to whatever extent the victim prefers. Additional collateral contacts are used in order to provide the Court with information needed to make the most informed decisions possible. A similar process is followed for juvenile Pre-Disposition Reports.

## Cond Release

Individuals under condition release are provided services as outlined by the administrative authority assigning those cases. All staff assist with services for District Court pre-sentence cases. We have two agents specifically assigned to MN DOC condition releasees.

# NARRATIVE OF CORE INTERVENTIONS AND EBP PROGRAMMING

This agency utilizes the most current versions of LS/CMI for adults and the YLS for juveniles. In addition, we use trailer tools to assist in better identifying risks and needs of those we supervise. Agents are trained in LS/CMI, YLS, ODARA, DRA, Northstar Gambling assessment, and RANT.

Motivational interviewing is used during the assessment process as well as daily interactions. Reviewing the assessments/score with the client allows the client to better assist in their own case plan. The use of case plans provides a framework for the client and agent to more effectively reach successful completion of goals, including Court ordered conditions and personal goals.

In addition to agents' efforts to provide good supervision which assists the client while also protecting community safety, agents also refer to:

- domestic violence programming (we have 1 agent trained but not a large enough caseload to provide this service in house)
- sex offender treatment via out of county providers (agents attend MNATSA to keep current on therapeutic topics and quarterly provider meetings)
- CD and MH services with options via in county providers, the Mille Lacs Band, and out of county providers.
- Cultural and gender specific responses and ongoing education/training of agents is encouraged.
- Housing is a very limited resource in county, especially for sex offenders and the homeless. We partner with social services and the Sheriff's Office as well as some local landlords.
- Staff are trained in the use of Carey Guides, T4C and Decision Points. We also have a partnership with public health to provide the Making a Change program which consists of sessions on cooking, nutrition, and finances, with an optional session in parenting.
- Aitkin County operates Sobriety Court, a state approved treatment court for drug and alcohol offenders. Aitkin County Community Corrections provides a full-time probation agent in this program.

## VICTIM CONCERNS

Crime Victims are identified by the prosecutor's office and notice is sent to our agency. Victims are contacted with regard to presentence investigations and restitution studies and as requested by the victim post sentence. The victim's concerns and input are included in said reports. We have a working relationship with HOPE (advocates for domestic abuse victims), the county crime victim coordinator, and social service to assist in meeting the needs of victims.

## CORRECTIONAL FEES

Corrections fees have traditionally been used to fill the funding gap prior to the 2023 legislation. The corrections fees assess directly by this agency are as follows:

| FEE TYPE | FEE AMOUNT | 2022 COLLECTED | 2022 IMPOSED |
|---|---|---|---|
| **Total** | | **$84,051** | **$136,385** |
| EHM | $22/day | $62,500 | - - |
| Supervision Fees | $50 short term or transfer<br>$200 non resident or MSD<br>$300 GM<br>$400 Felony | $21,551 | - - |
| Other | $50 DVI<br>$15 UAs | $0 | - - |

We currently continue to assess the above fees. Supervision fees continue to be assessed but do not prohibit discharge from probation but will no longer be assessed beginning 2027. Other fees are a fee for services rendered and will continue. Our agency provides EHM services including hookup, activation and maintenance. We contract through Minnesota Monitoring for rental of the EHM units.

# CONTRACTED SERVICES

We will be utilizing the new EBP Coordinator to analyze programs, costs and outcomes.

## Contracted Service or Programs

| Program | Provider | Annual Contracted cost |
|---|---|---|
| **Out of home placement** | East Central Regional Juvenile Center | Annual Contract beds: $118,956 |
| **Out of home placement** | Northwestern MN Juvenile center; Village Ranch; Prairie Lake Youth Program; etc | No contract: pay per service |
| **Alcohol and Drug Testing** | Redwood/Abbott; Premier Biotech | No annual contract: pay per service |
| **Electronic Home Monitoring** | Minnesota monitoring | No contract: $9.95-$11.95/unit/day |
| **MADD Panel** | A two-hour panel presentation regarding the impact on victims of drinking and driving. | No contract: client pays program |
| **Diagnostic Assessment** | Nystrom's, Northern, Pines, etc | No contract: client pays program |
| **Sex Offender Programming** | CORE, Alpha, The Duluth Institute, etc | No contract: client pays program |
| **Online education** | 3rd Millennium, Safety Council, MADD, DWSR, Diversion Solutions, etc | No contract: client pays program |
| **Restorative Justice** | Aitkin County Area Restorative Justice | In house: no fee |
| **In-Home Family Counseling** | Local social services | No contract: no fee |

# DEPARTMENT BUDGET

## Fiscal Years 2024-2025

*see appendix for full department budget*

## SALARY ROSTER

| PROGRAM AREA | DESCRIPTION | FTE |
|---|---|---|
| ADMINISTRATIVE | Director employed as the Department Head to oversee the correctional operations in Aitkin County and as the liaison with stakeholders. | 1.0 |
| | A full-time Office Assistant provides confidential support to the Director as well support to adult and juvenile services. | 1.0 |
| | EBP coordinator (beginning early 2024) | 1.0 |
| ADULT PROBATION | Corrections Agent provide services to adult offenders sentenced to probation and supervised release offenders in Aitkin County. | 4.5 |
| Specialty Court Agent | Corrections Agent provides full-time services to the Aitkin County Sobriety Court. | 1.0 |
| JUVENILE PROBATION | Corrections Agent provides services to juveniles sentenced to probation in Aitkin County, as well as diversion programs. | 0.5 |

## FTEs BY PROGRAM AREA

| Position | Salary Range | FTEs |
|---|---|---|
| Office Assistant | 40,922 – 56,197 | 1.0 |
| EBP Coordinator | 53,138 – 73,131 | 1.0 |
| Corrections Agents | 65,617 – 90,065 | 7.0 |
| Director | 85,693 – 118,289 | 1.0 |

## DOC Funding Analysis

| **Probation Program** | **CY2024 Budget** | CY2025 Budget (est) |
|---|---|---|
| Corrections-Subsidy | $867,934 | $867,934 |
| **Expenditure** | | |
| Salaries & fringe | $871,982 | $950,000 |
| Administration | $24,205 | $25,000 |
| Training Program | $10,600 | $11,000 |
| Juvenile Probation Program | $221,500 | $225,000 |
| Adult Probation Program | $ 4,200 | 4,200 |
| Sobriety Court | $ 5,700 | $5,700 |
| Probation Services | $43,000 | $45,000 |
| **Expense Subtotal** | $1,181,187 | $1,265,900 |
| **Total Revenue** | ($867,934) | ($867,934) |
| **Net** | $313,353 | $397,966 |

# BOARD SIGNATURE PAGE

MINNESOTA DEPARTMENT OF CORRECTIONS - COMMUNITY CORRECTIONS ACT SUBSIDY

To be used for original application and for amendments to the original comprehensive plan that adds or deletes units of service.
Check one: **X** **Original Application** ____ Amendment

Applicant: **AITKIN COUNTY COMMUNITY CORRECTIONS**

Application Period: **Fiscal Year 2024** through **Fiscal Year 2027**

| | | |
|---|---|---|
| Original Proposed Budget: | DOC Subsidy | $ 867,934 |
| | Other State Funds | $ 61,000 |
| | County Funding | $ 252,253 |
| | **TOTAL BUDGET** | $ 1.181,187 |

Community Corrections Administrator:
Name/Title/Signature **KAMERON GENZ, DIRECTOR**

Address **209 2nd ST NW -Rm 178, AITKIN, MN 56431**

Telephone # **(218) 927-7202**

Financial Officer:
Name/Title/Signature **KIRK PEYSAR, AITKIN CO. AUDITOR**

Address GOVERNMENT CENTER
**307 – 2nd Street NW – Rm #121, AITKIN, MN 56431**

Telephone # **(218) 927-7354**

APPLICANT'S AGREEMENT

It is understood and agreed to by the applicant that:
1) Funds granted for this community corrections comprehensive plan will be used only to implement the plan as approved by the Commissioner of Corrections.
2) The grant may be terminated in whole, or in part, by the Commissioner of the Minnesota Department of Corrections. Such termination shall not affect obligations incurred under the subsidy prior to the effective date of such termination.
3) The applicant will apply for approval to change the plan whenever implementation or financing will be materially changed. Approval will be governed by Minnesota Rules Chapter 2905.0500.
4) Financial status reports will be submitted every three months and narrative progress reports every six months as directed by the Commissioner of Corrections. Necessary records and accounts, including financial and property controls, will be maintained and made available to the Department of Corrections.
5) The applicant will strictly adhere to rules promulgated by the Department of Corrections (Minnesota Rules 2905).

SIGNATURES OF AUTHORIZED OFFICIALS

Please remember: These same signatures are required to be on any amendment that adds or deletes programs/services/funding.

Name/Title/Signature: Jessica Siebert, Aitkin Co. Administrator _____

Name/Title/Signature: Aitkin Co. Board Chairperson _____

# Board of County Commissioners Agenda Request

**10A**
Agenda Item #

**Requested Meeting Date:** February 13, 2024

**Title of Item:** Approve Letter to Governor Walz

| | | |
|---|---|---|
| ☑ REGULAR AGENDA | **Action Requested:** | ☐ Direction Requested |
| ☐ CONSENT AGENDA | ☑ Approve/Deny Motion | ☐ Discussion Item |
| ☐ INFORMATION ONLY | ☐ Adopt Resolution (attach draft) | ☐ Hold Public Hearing* |
| | **provide copy of hearing notice that was published* | |

| | |
|---|---|
| **Submitted by:** Jessica Seibert | **Department:** Administration |
| **Presenter (Name and Title):** Jessica Seibert, County Administrator | **Estimated Time Needed:** 5 Min. |

**Summary of Issue:**

Please see the attached letter drafted to Governor Walz regarding wolf population management concerns.

**Alternatives, Options, Effects on Others/Comments:**

**Recommended Action/Motion:**
Approve the Board chair to sign and send the attached letter to Governor Walz.

**Financial Impact:**
*Is there a cost associated with this request?* ☐ *Yes* ☑ *No*
*What is the total cost, with tax and shipping? $*
*Is this budgeted?* ☐ *Yes* ☐ *No* *Please Explain:*

Legally binding agreements must have County Attorney approval prior to submission.

AITKIN COUNTY COMMISSIONERS

Aitkin County Government Center
307 2nd Street NW, Room 310
Aitkin, MN 56431

Phone: 218-927-3093
Fax: 218-927-7374

February 13, 2024

Honorable Tim Walz
Governor of Minnesota
130 State Capitol
75 Rev. Dr. Martin Luther King Jr. Blvd.
St. Paul, MN 55155

Re: Wolf Population Management

Dear Governor Walz:

I am writing you on behalf of the Aitkin County Board of Commissioners to share concerns about the management of the gray wolf population in Minnesota. While we understand the importance of protecting this iconic species, it is equally critical to address the challenges with their increasing numbers.

Increasing populations of wolves can lead to various consequences including predation on livestock, predation on deer populations, and conflict with humans. These issues not only pose threats to the livelihood of local Aitkin County farmers but affect local hunters, tourism, and family pets.

We urge you to prioritize the development and implementation of a management plan that strikes a balance between conservation and addressing the negative impacts of an increasing wolf population on local Aitkin County citizens.

Thank you for your thoughtful consideration.

Sincerely,

J. Mark Wedel
Board Chair
Aitkin County

CC: Bret Sample, Board Vice Chair
Laurie Westerlund, District 2 Commissioner
Travis Leiviska, District 3 Commissioner
Michael Kearney, District 5 Commissioner
MN House Environment and Natural Resources Finance & Policy Chair
MN Senate Environment, Climate, and Legacy Chair

# Board of County Commissioners Agenda Request

**10B**
Agenda Item #

**Requested Meeting Date:** February 13, 2024

**Title of Item:** Consider Aitkin County CARE Appropriation Resolution

| | | |
|---|---|---|
| ☑ REGULAR AGENDA | **Action Requested:** | ☐ Direction Requested |
| ☐ CONSENT AGENDA | ☐ Approve/Deny Motion | ☐ Discussion Item |
| ☐ INFORMATION ONLY | ☑ Adopt Resolution (attach draft) | ☐ Hold Public Hearing* |
| | **provide copy of hearing notice that was published* | |

| | |
|---|---|
| **Submitted by:** Jessica Seibert | **Department:** Administration |
| **Presenter (Name and Title):** Jessica Seibert, County Administrator | **Estimated Time Needed:** 10 Min. |

**Summary of Issue:**

Please see the attached letter from Aitkin County CARE requesting an additional 2024 appropriation. A revised appropriation resolution is attached for consideration.

**Alternatives, Options, Effects on Others/Comments:**

**Recommended Action/Motion:**
Approve/Deny attached resolution.

**Financial Impact:**
*Is there a cost associated with this request?* ☑ *Yes* ☐ *No*
*What is the total cost, with tax and shipping?* $ 20,000.00
*Is this budgeted?* ☐ *Yes* ☑ *No* *Please Explain:*

Dollars would need to be used from fund balance if approved.

Legally binding agreements must have County Attorney approval prior to submission.

CARE
COORDINATING AREA RESOURCES EFFECTIVELY

January 25, 2024

Aitkin County Commissioners

Dear County Commissioners:

The support that you have given Aitkin County CARE over the past 14 years is tremendous and the Aitkin County CARE Board thanks you for this. We understand that there was some discussion at one of your Board meetings about our current situation. On Tuesday, January 23, 2024 the Aitkin County CARE Board voted to request an additional $20,000 to their appropriations.

As you are aware, we have been trying to replace the current Executive Director for her retirement. The challenges are three fold:

1.) The salary expectations have exceeded current pay. This position requires grant making/reporting skills.
2.) Lack of benefits Aitkin County CARE can offer.
3.) Workforce accessibility: interviewees don't show and don't seem to care about working. This has been a real struggle.

Aitkin County CARE began in 2010 as services were moved from Aitkin County to this non-profit. The stipend of $37,900 has been appropriated since that time.

In 2023 Aitkin County CARE provided 831 services to unique individuals. Our program delivery has increased to 14 different programs for older adults and disabled adults. We need all the services that are offered in our communities. We hope to grow and have more services in the future. .Survey results from clients indicate a 98% satisfaction rate of services and 92% indicate the services allow them to stay in their homes. 100% of surveys returned say they would refer friends and family to Aitkin County CARE.

Thank you for your consideration of this request.

On Behalf of the Aitkin County CARE Board,

Lynne Jacobs, Executive Director

**CERTIFIED COPY OF RESOLUTION OF COUNTY BOARD OF AITKIN COUNTY, MINNESOTA**

ADOPTED February 13, 2024

By Commissioner: xxx **20240213-xxx**

## 2024 Appropriations (Amended)

**BE IT RESOLVED,** that the Aitkin County Board of Commissioners hereby adopts the final appropriation and dues amounts payable in 2024.

| | | |
|---|---|---|
| **Dues** | | |
| North Counties Land Use Coordinating Board (10-921.6240) | $2,000 | |
| MN Rural Counties Caucus (MRCC) (01-44.6844) | $2,300 | |
| Association of MN Counties (AMC) (01-44.6845) | $11,142 | |
| Arrowhead Counties (01-44.6846) | $2,750 | |
| Joint Counties Natural Resource Board (10-921.6240) | $1,000 | |
| **Joint Powers** | | |
| East Central Regional Library (Dept 500-500.6801) | $251.450 | |
| Airport-McGregor (Dept 700-903.6801) | $15,600 | |
| Snake River Watershed (Dept 600-552.6836) | $0 | |
| Airport-Aitkin (Dept 700-903.6800) | $30,000 | |
| Mississippi Headwaters Board (Dept 600-552.6847) | $1,500 | |
| **Appropriations** | | |
| Soil and Water (Dept 600-552.6801) | $81,549 | $68,849 County Allocation<br>$7,700 LCWP<br>$5,000 Ag Inspector |
| **C.A.R.E. (Dept 500-502.6848)** | **$57,900** | |
| Historical Society (Dept 500-501.6801) | $25,000 | |
| Historical Society Insurance (Dept 500) | $5,435 | |
| Ag Society (Dept 600-550.6801) | $14,000 | |
| Aa Society Capital Improvement (Dept 600-550.6843) | $10,000 | |
| Ag Society Insurance (Dept 600) | $9,278 | |
| ANGELS (01-044.6849) | $0 | |
| Support Within Reach (01-44.6847) | $2,000 | |
| Total Dues & Appropriations | $522,904 | |

Commissioner xxx seconded the adoption of the resolution, and it was declared adopted upon the following vote

XXX MEMBERS PRESENT All Members Voting xxx

**STATE OF MINNESOTA}**
**COUNTY OF AITKIN}**

I, Jessica Seibert, County Administrator, Aitkin County, Minnesota do hereby certify that I have compared the foregoing with the original resolution filed in the Administration Office of Aitkin County in Aitkin, Minnesota as stated in the minutes of the proceedings of said Board on the 13th day of February 2024, and that the same is a true and correct copy of the whole thereof.

**Witness my hand and seal this 13th day of February 2024**

Jessica Seibert
County Administrator

# Board of County Commissioners Agenda Request

**10C**
Agenda Item #

**Requested Meeting Date:** February 13, 2024

**Title of Item:** Administrator Updates

| | |
|---|---|
| ☑ REGULAR AGENDA<br>☐ CONSENT AGENDA<br>☐ INFORMATION ONLY | **Action Requested:**<br>☐ Approve/Deny Motion<br>☐ Adopt Resolution (attach draft)<br>☐ Direction Requested<br>☑ Discussion Item<br>☐ Hold Public Hearing*<br>**provide copy of hearing notice that was published* |
| **Submitted by:**<br>Jessica Seibert | **Department:**<br>Administration |
| **Presenter (Name and Title):**<br>Jessica Seibert, County Administrator | **Estimated Time Needed:**<br>5 minutes |

**Summary of Issue:**

Administrator Updates.

**Alternatives, Options, Effects on Others/Comments:**

**Recommended Action/Motion:**

Discussion only.

**Financial Impact:**

*Is there a cost associated with this request?* ☐ *Yes* ☑ *No*

*What is the total cost, with tax and shipping? $*

*Is this budgeted?* ☐ *Yes* ☐ *No* *Please Explain:*

Legally binding agreements must have County Attorney approval prior to submission.

# Aitkin County Board of Commissioners
# Committee Reports Forms

**11A**
Agenda Item #

| Committee | Freq | Scheduled | Representative |
|---|---|---|---|
| **Association of MN Counties (AMC)** | | | |
| Environment & Natural Resources Policy | | | Sample |
| General Government | | | Leiviska |
| Health & Human Services | | | HHS Director |
| Indian Affairs Task Force | | | Commissioner Laurie Westerlund |
| Public Safety Committee | | | Commissioner Laurie Westerlund |
| Transportation Policy | | | Kearney |
| Age-Friendly Changemakers | | | Kearney |
| Aitkin Airport Commission | Monthly | 1st Wednesday | Wedel |
| Aquatic Invasive Species (AIS) | Monthly | 3rd Thursday | Wedel and Sample |
| Aitkin County CARE Board | Monthly | 3rd Thursday | Westerlund |
| Aitkin County Community Corrections | Quarterly | Varies | Wedel and Westerlund |
| Anoka County JPA Advisory Board | 3x per year | 1st Thursday in Feb, June and | Westerlund |
| Aitkin County Opioid Settlement Sub-committee | TBD | TBD | Sample |
| Aitkin County Water Planning Task Force | Bi-monthly | 3rd Wednesday | Wedel |
| Aitkin Economic Development Administration | Quarterly | 3rd Thursday | Wedel |
| Arrowhead Counties Association | 8 or 9x yearly Sept. to May | 1x a month, 3rd Wed. | Kearney, Alt. Westerlund |
| Arrowhead Economic Opportunity Agency | Bi-monthly (begin Feb.) | 3rd Wednesday | Kearney, ALT. Leiviska |
| Arrowhead Regional Development Comm. | Quarterly | 3rd Thursday | Kearney, ALT. Leiviska |
| ATV Committee | Monthly | | Leiviska and Westerlund |
| Big Sandy Lake Management Plan | Monthly | 2nd Wednesday | Sample Alt. Kearney |
| Brainerd 1 Watershed 1 Plan | Monthly | 4th Tuesday | Wedel |
| Budget Committee | Monthly | 1st Tuesday | Sample and Wedel |
| East Central Regional Library Board | Monthly | 2nd Monday | Leiviska Alt. Sample |
| Economic Development | Monthly | 4th Wednesday | Wedel and Sample |
| Emergency Management | As needed | | Wedel |
| Environmental Assessment Worksheet | As needed | | Kearney and Sample |
| Extension | 4x year | Monday | Kearney Alt. Westerlund |
| Facilities | As needed | | Wedel and Kearney |
| H&HS Advisory (Liaison) | Monthly except July | 1st Wednesday | Wedel and Kearney |
| Historical Society (Liaison) | Monthlv | 4th Wednesday | Leiviska |
| Joint Powers Natural Resource Board | Odd Months | 4th Monday | Sample and Land Commissioner |
| Lakes and Pines | Monthly | 3rd Monday | Leiviska Alt. Kearney |
| Law Library | Quarterly | Set by Judge | Leiviska Alt. Kearney |
| MCIT | | | Westerlund, Seibert |
| McGregor Airport Commission | Monthly | Last Wednesday | Kearney |
| Mille Lacs Fisheries Input Group | 8-10x yr | | Westerlund |
| Mille Lacs Watershed | 10x year | 3rd Monday | Leiviska, Alt. Westerlund |
| Mississippi Grand Rapids 1W1P | | | Kearney |
| Mississippi Headwaters Board | Monthly | 4th Friday | Kearney Alt. Sample |
| MN Rural Counties | 8x year | Varies | Westerlund, Alt. Leiviska |
| Natural Resources Advisory Committee | 8-10x yr | 2nd Monday | Kearney and Sample |
| NE MN Office Job Training | As called | | Leiviska |
| Northeast MN ATP | Quarterly | 2nd Wednesday | Kearney (Leiviska, Alt.) and |
| Northeast MN Emergency Communications Board | 5-6x yr | 4th Thursday | Leiviska (Sheriff Guida Alt.) |
| Northeast Waste Advisory Council | Quarterly | 2nd Monday | Sample, Alt. Westerlund |
| Northern Counties Coalition | Monthly | 1st Thursday | Westerlund Alt. Kearney |
| Ordinance | As needed | | Leiviska and Sample |
| Personnel/Insurance | As needed | 2nd Tuesday | Leiviska and Wedel |
| Planning Commission | Monthly | 3rd Monday | Kearney Alt. Westerlund |
| Rum 1W1P Policy Committee | Monthly | Unknown | Westerlund, Alt. Leiviska |
| Snake River 1W1P Policy | | | Leiviska Alt. Sample |
| Sobriety Court | Bi-Monthly | 3rd Thursday | Wedel |
| Solid Waste Advisory | As needed | | Wedel and Sample |
| Toward Zero Deaths | Monthly | 2nd Wednesday | Wedel |
| Tri-County Community Health Services | Bi-Monthly | 2nd Thursday | Westerlund |